ASSEMBLY INSTRUCTIONS

TWIN HOUSE BED WITH TRUNDLE

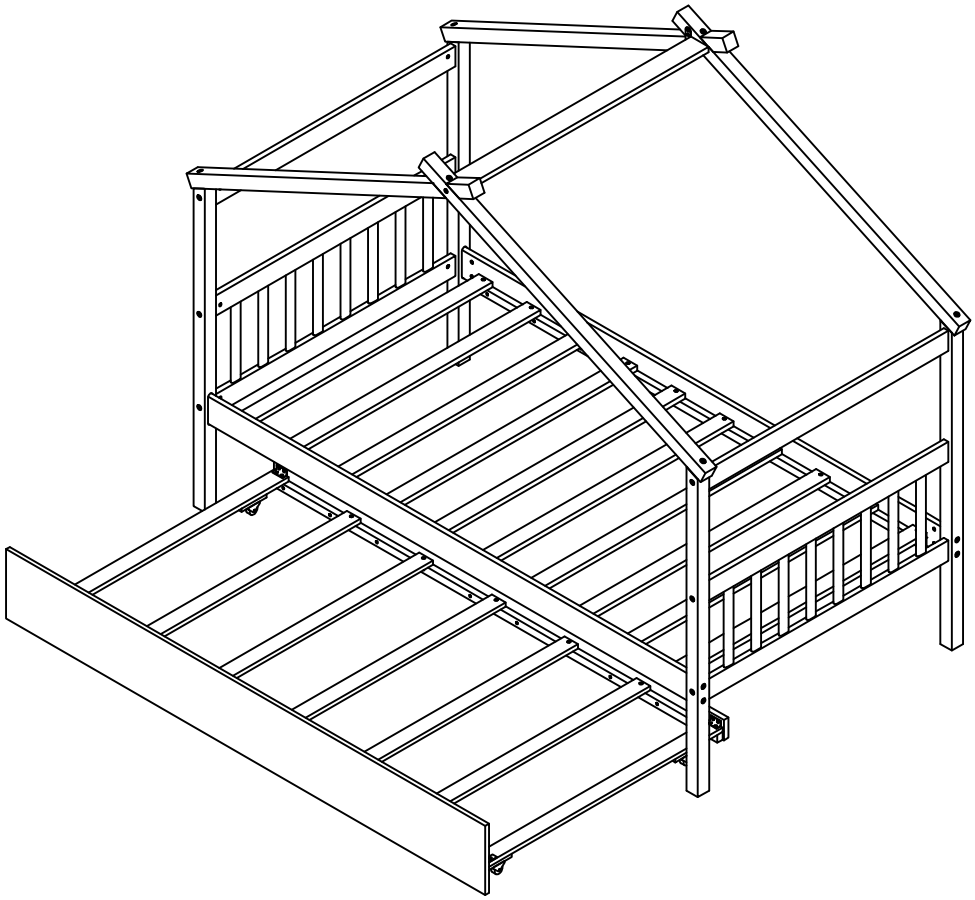

WF300800

Detail View

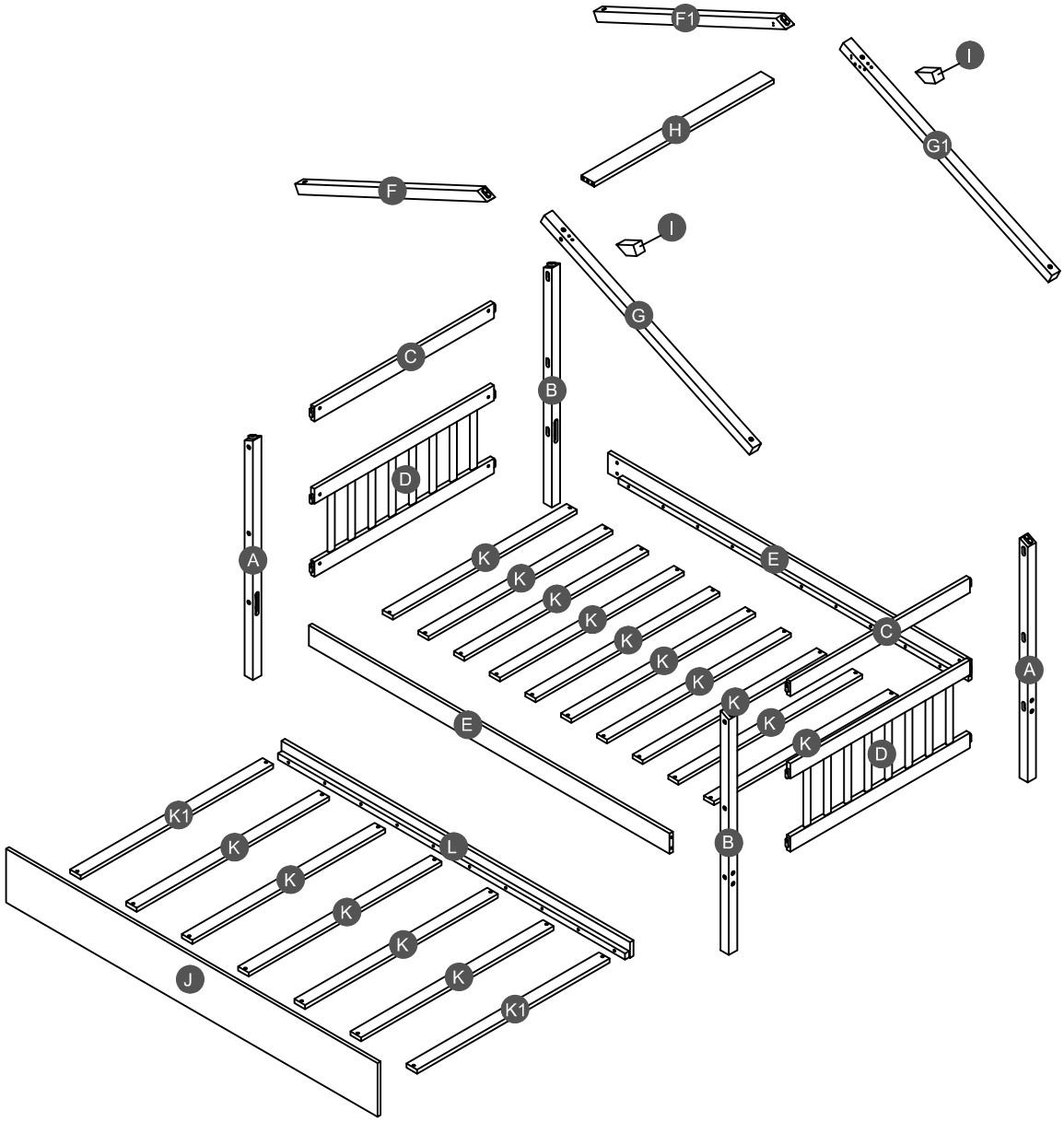

Part List

A 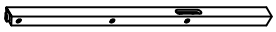 Leg (Left Front/Right Back) - 2pcs	**B** 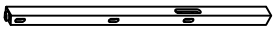 Leg (Left Back/Right Front) - 2pcs	**C** 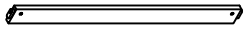 Horizontal bar HB/FB - 2pcs
D 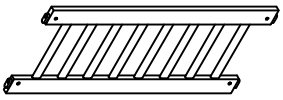 Frame HB/FB - 2pcs	**E** Side rail - 2pcs	**F** 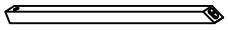 Upper (Left Front) - 1pc
F1 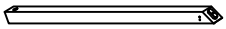 Upper (Left Back) - 1pc	**G** 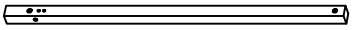 Upper (Right Front) - 1pc	**G1** 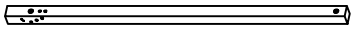 Upper (Right Back) - 1pc
H 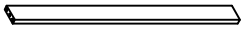 Upper horizontal bar - 1pc	**I** Block - 2pcs	**J** 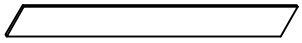 Front panel of Trundle - 1pc
K 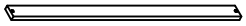 Slats - 15pcs	**K1** 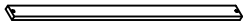 Slats - 2pcs	**L** Back panel side rail of Trundle -1pc

Hardware List

1 Ø8*30mm	**2** (Ø15)1/4"*100mm	**3** (Ø15)1/4"*80mm
Wood dowel (6pcs)	Hex-Head bolts (8pcs)	Hex-Head bolts (14pcs)
4 (Ø12)1/4"*65mm	**5** 1/4"*15 (9.5mm)	**6** (1/4")4.5*58mm
Hex-Head bolts (8pcs)	Horizontal-Hole bolts(22pcs)	Allen key (1pc)
7 Ø4*30mm	**8** Ø3.5*19mm	**9** Ø3.5*15mm
Wood screws (42pcs)	Wood screws (8pcs)	Wood screws (16pcs)
10 75*20*2 mm	**11** 95*95*18*3mm	**12** 40*18*18*2mm
Metal bracket (2pcs)	Metal bracket (2pcs)	Metal bracket (2pcs)
13 100*63*20mm		
Wheels (4pcs)		

ASSEMBLY TOOLS REQUIRED (NOT INCLUDED)

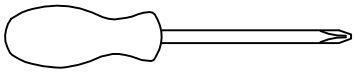

PLEASE BE CAREFUL DO NOT DAMAGE THE HOLE POSITION WHEN YOU USE POWER TOOLS !

STEP 1:

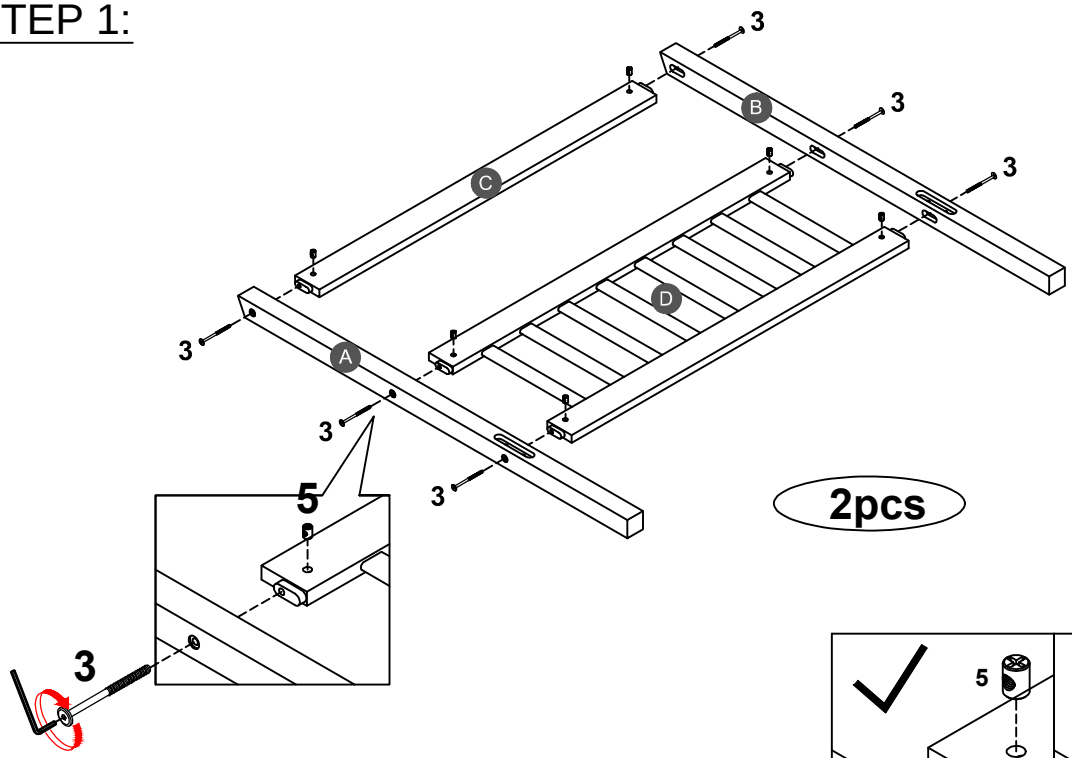

3	5
12PCS	12PCS

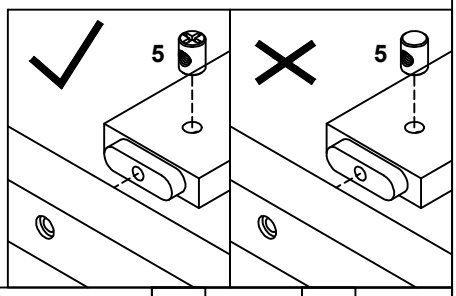

Note:Part 5 will face up with the "x" mark on it, otherwise it cannot be tightened

STEP 2:

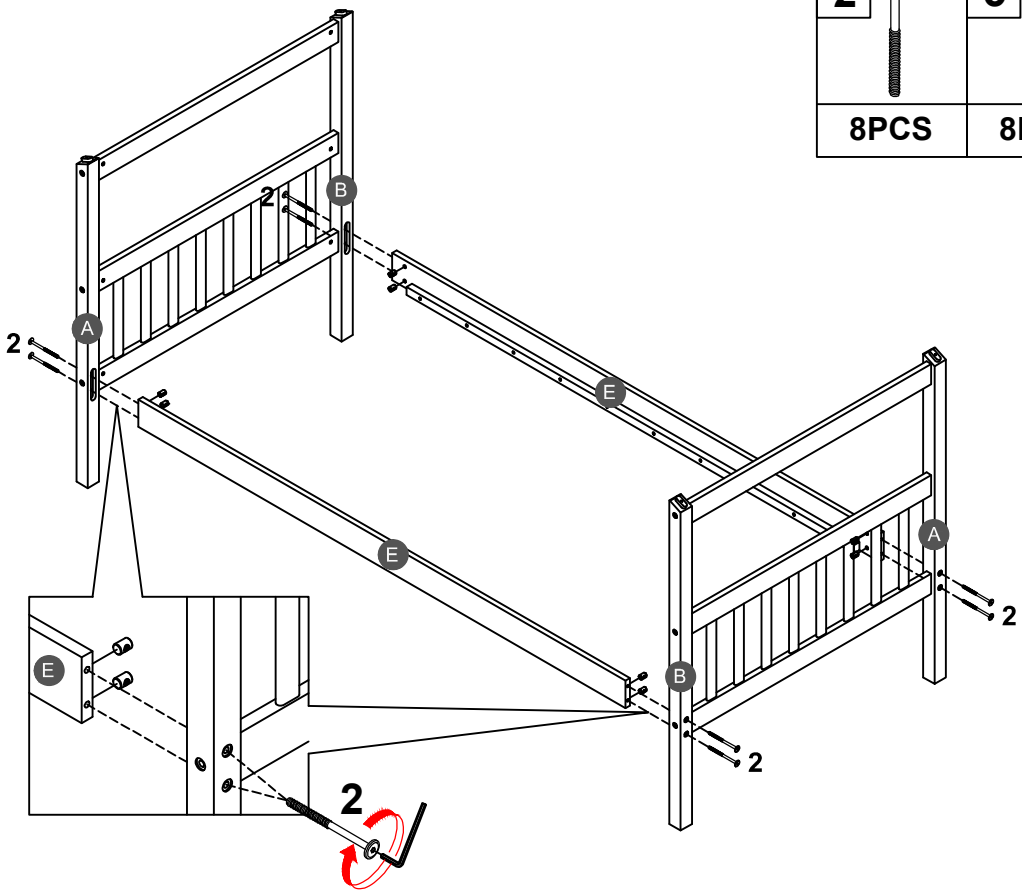

2	5
8PCS	8PCS

STEP 3:

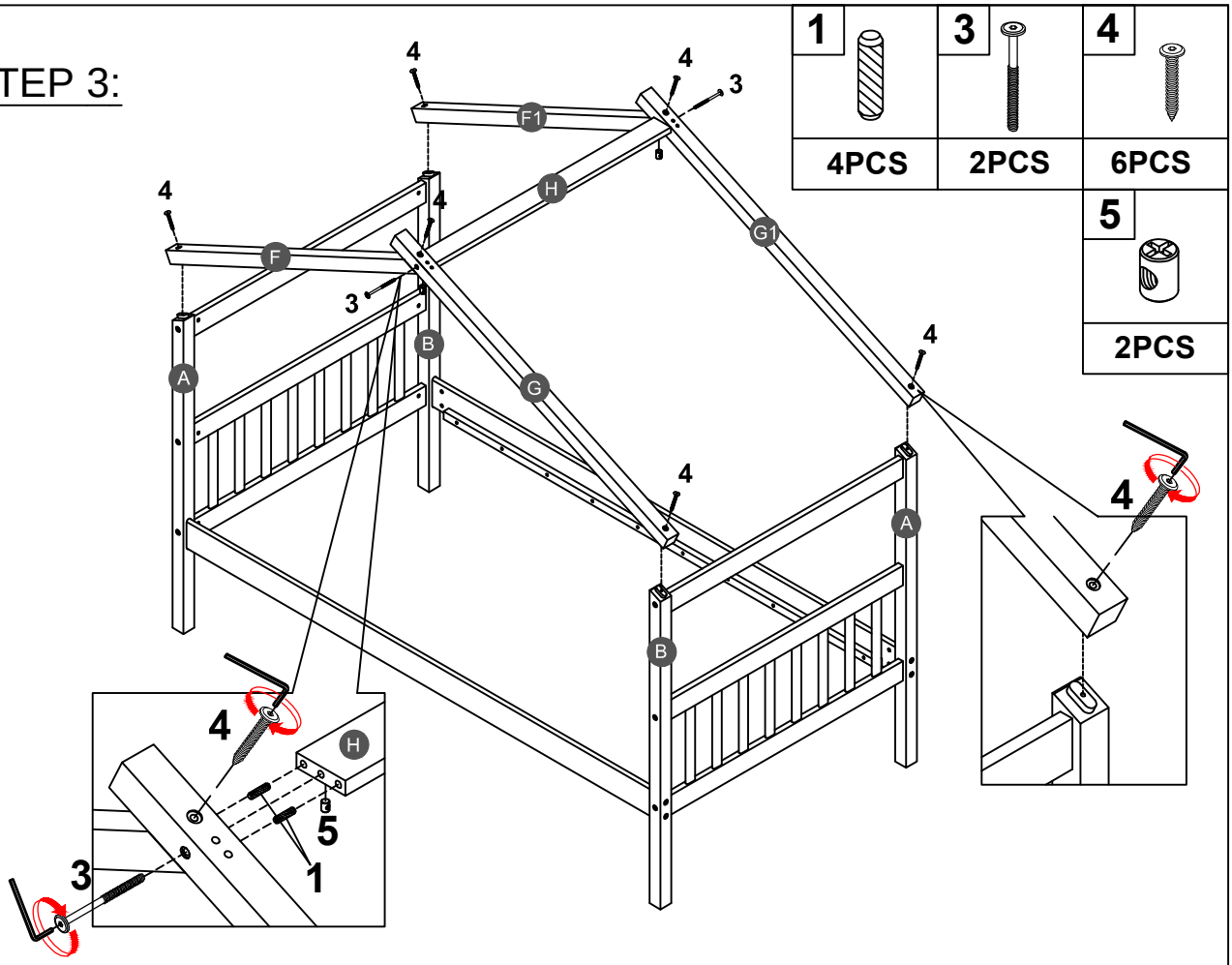

STEP 4:

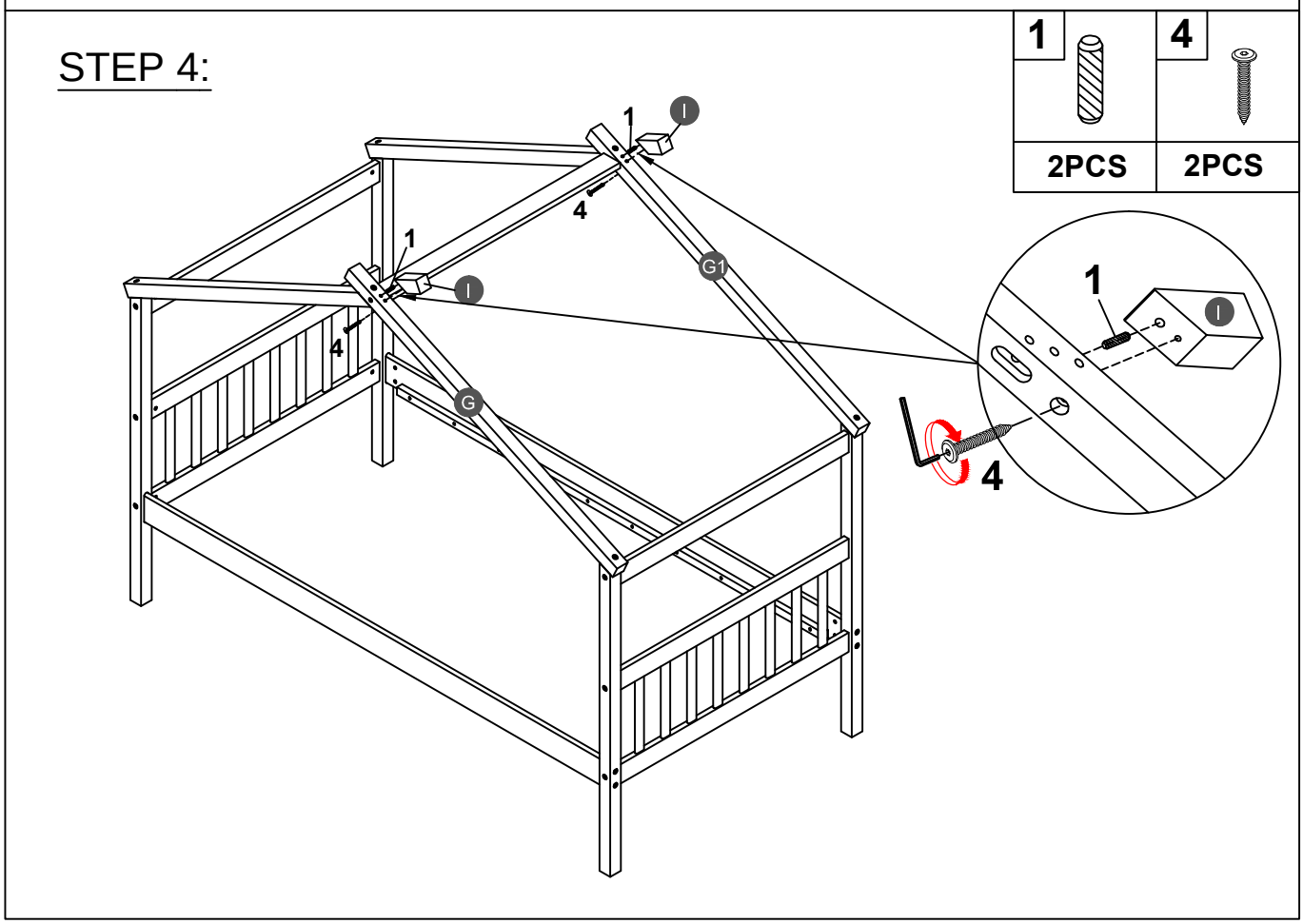

STEP 5:

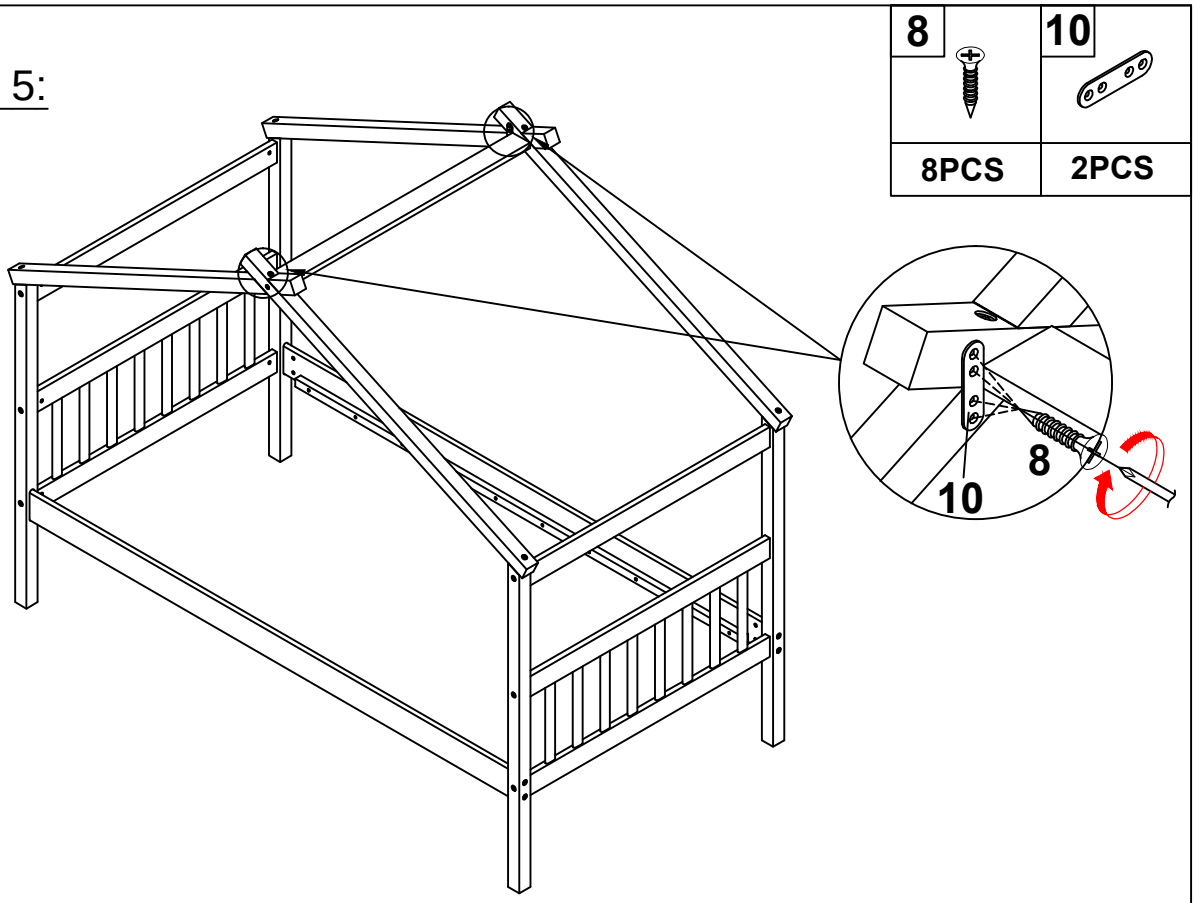

STEP 6:

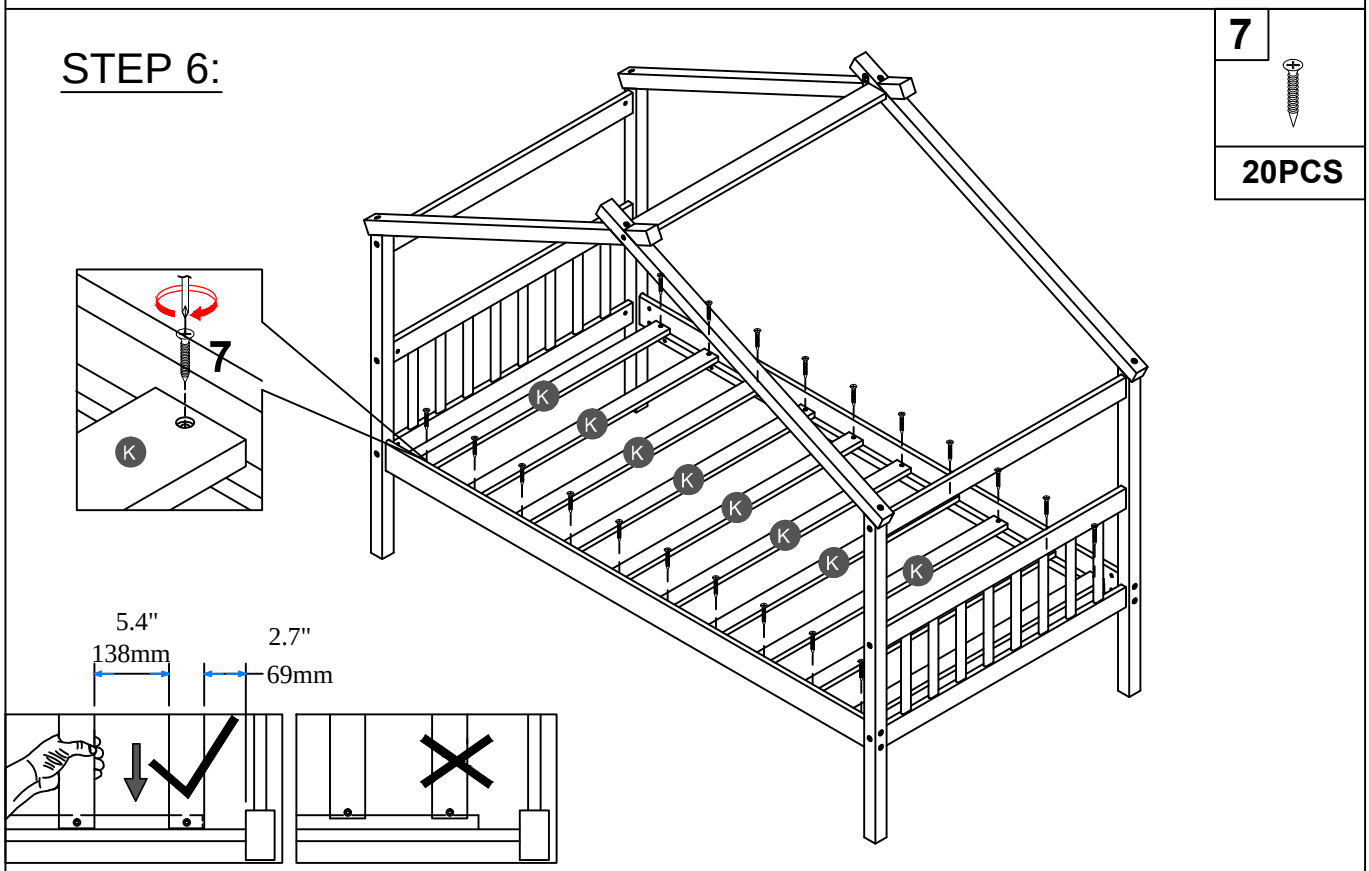

Note: Do not lock the screws of the bed slats to the outermost edge of the bed slats, you need to leave a certain space at the edges, otherwise it will cause the board to break.
Do not lock the bed slats on the edge of the wood, please hold firmly before screwing , hold it in place with one hand, then lock the screw.

STEP 7:

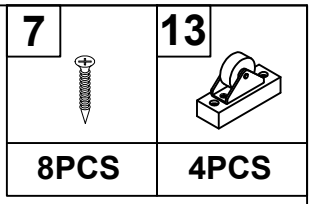

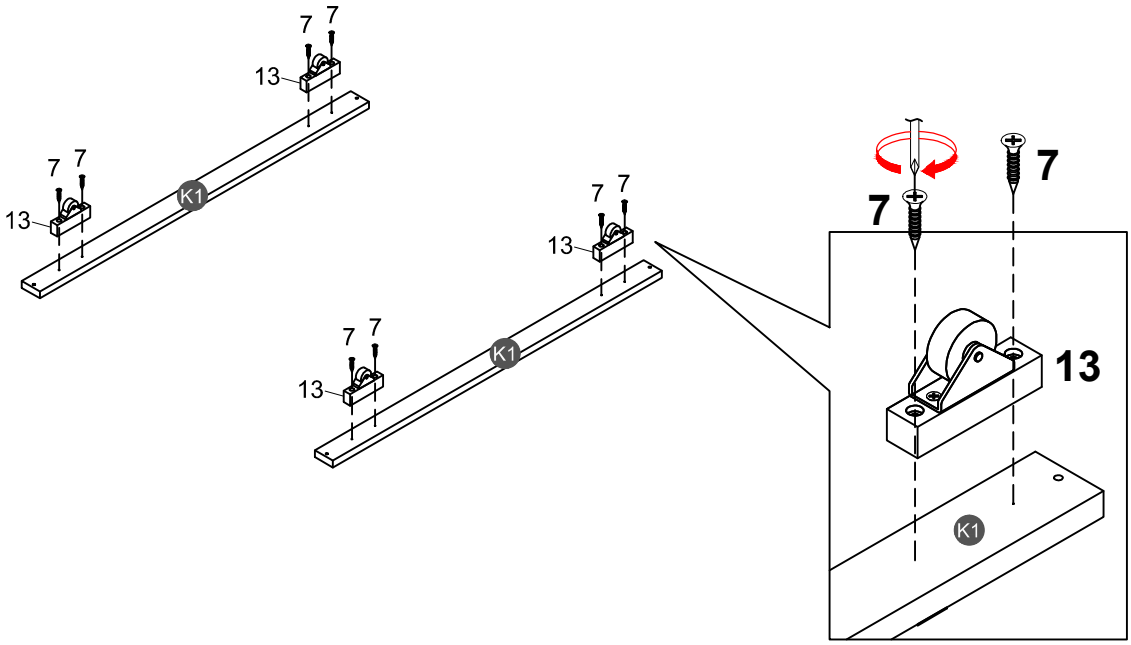

STEP 8:

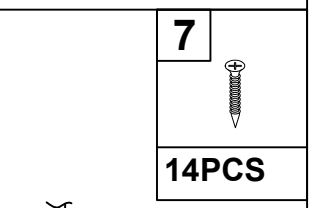

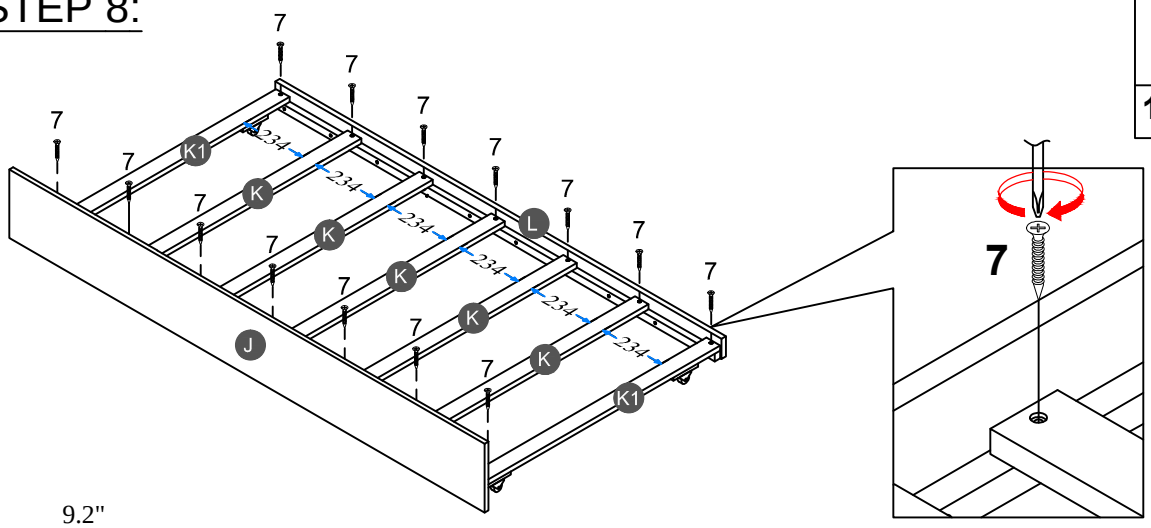

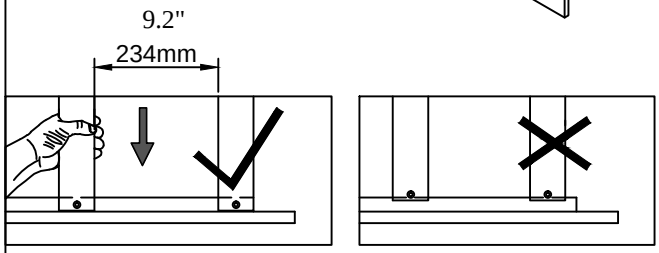

Note: Do not lock the screws of the bed slats to the outermost edge of the bed slats, you need to leave a certain space at the edges, otherwise it will cause the board to break.
Do not lock the bed slats on the edge of the wood, please hold firmly before screwing , hold it in place with one hand, then lock the screw.

STEP 9:

9	11
8PCS	2PCS

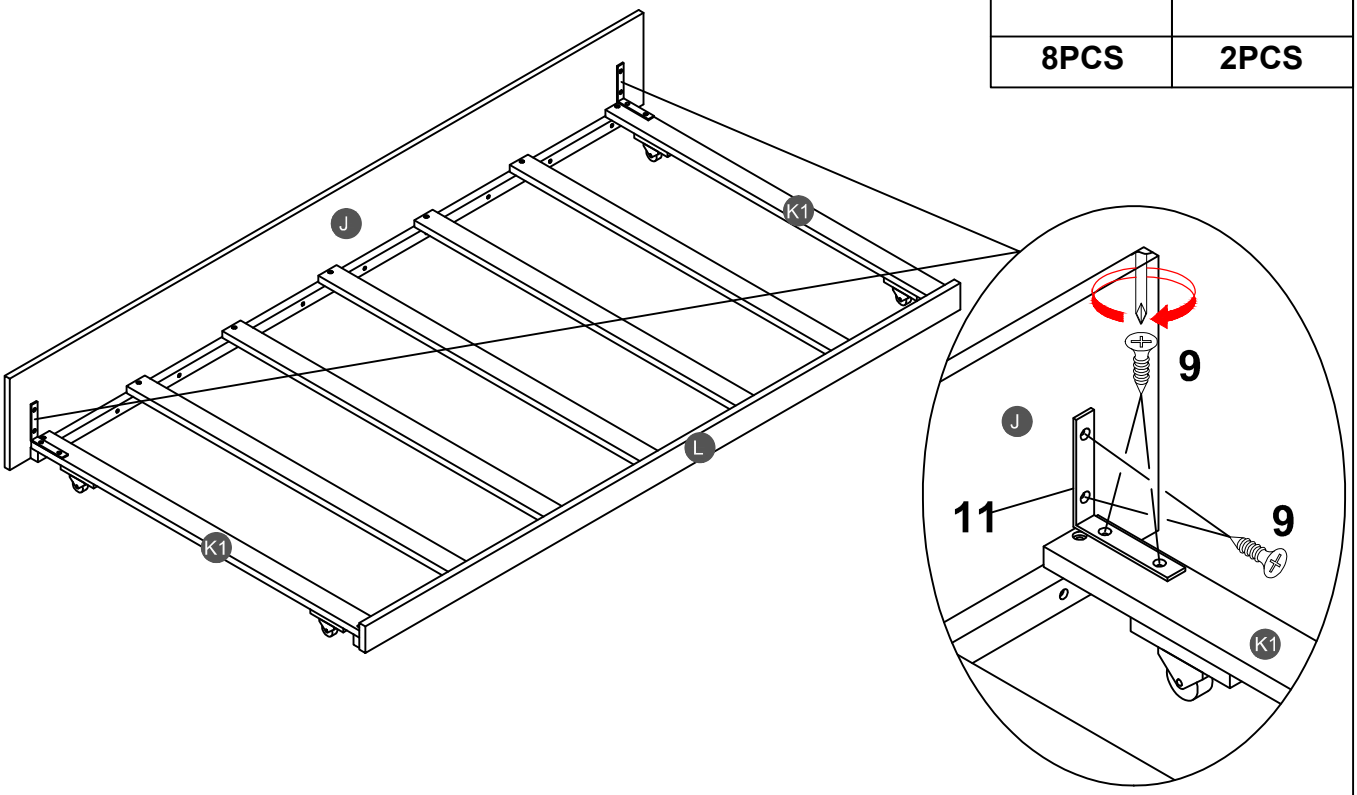

STEP 10:

9	12
8PCS	2PCS

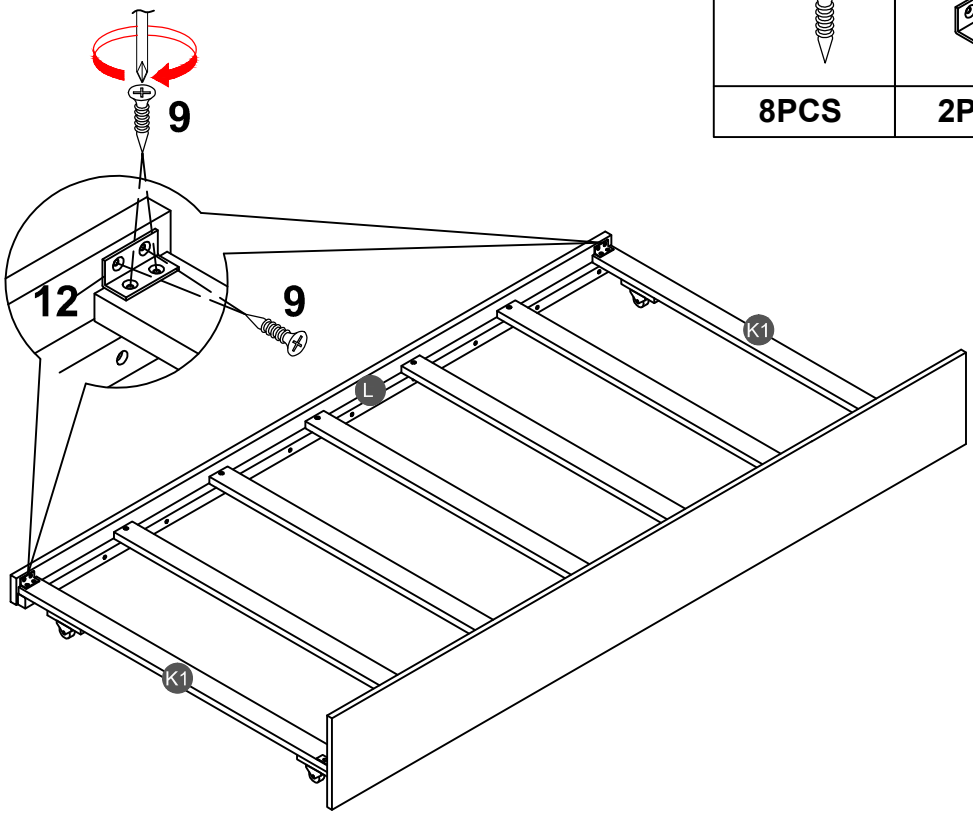

STEP 11:

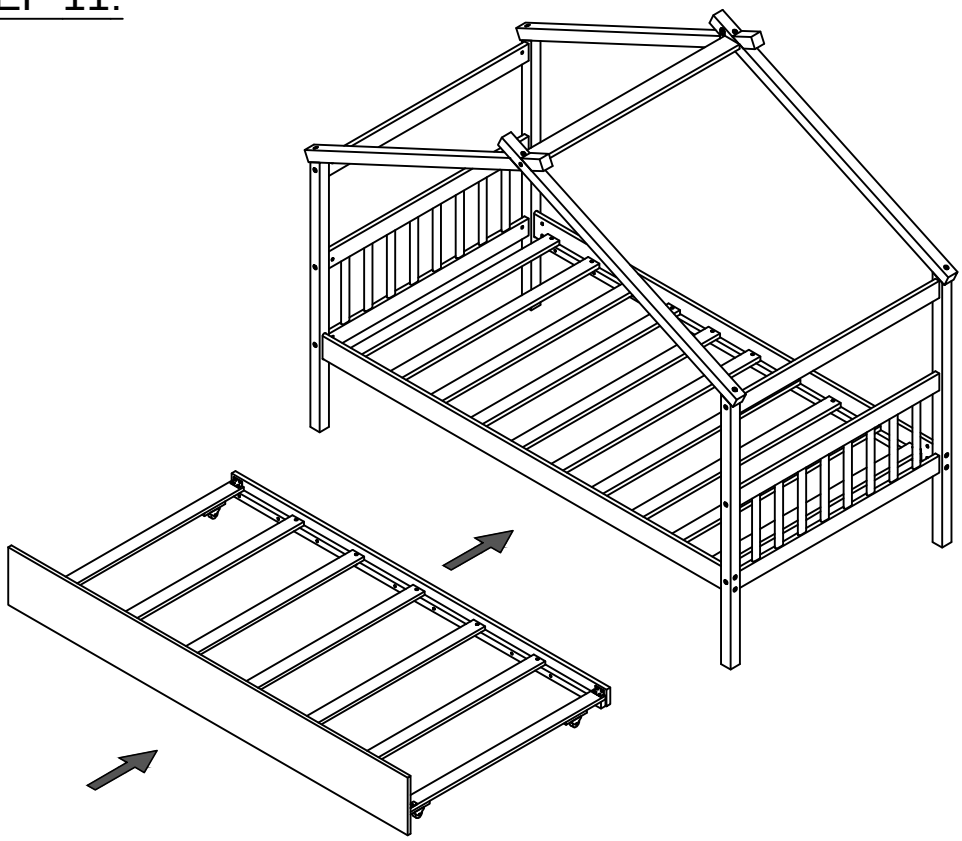
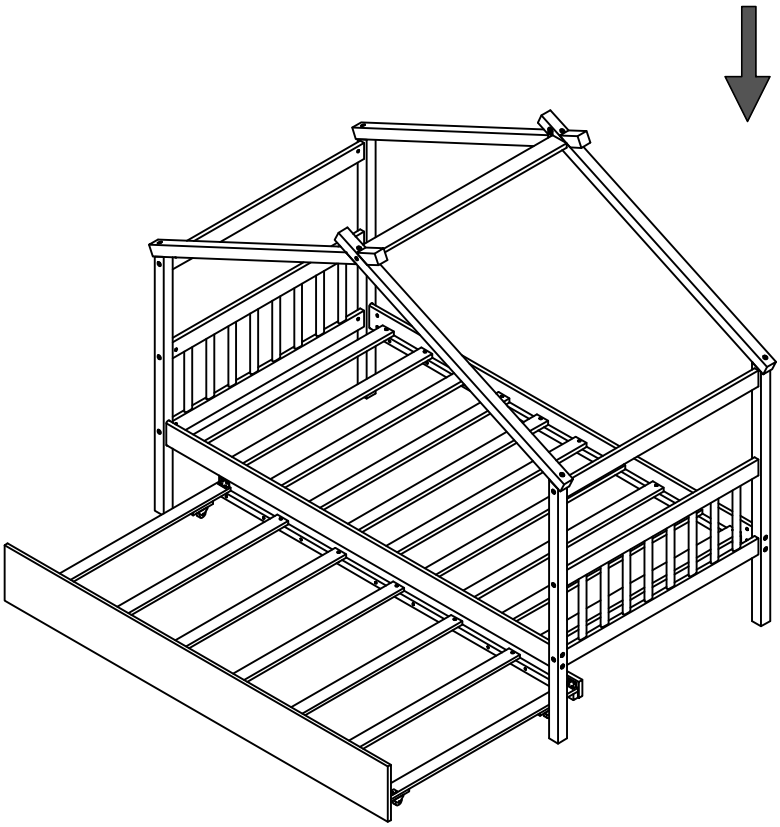
Push Trundle and Drawer under the bottom of Bunkbed.