ASSEMBLY INSTRUCTIONS

LOFT BED

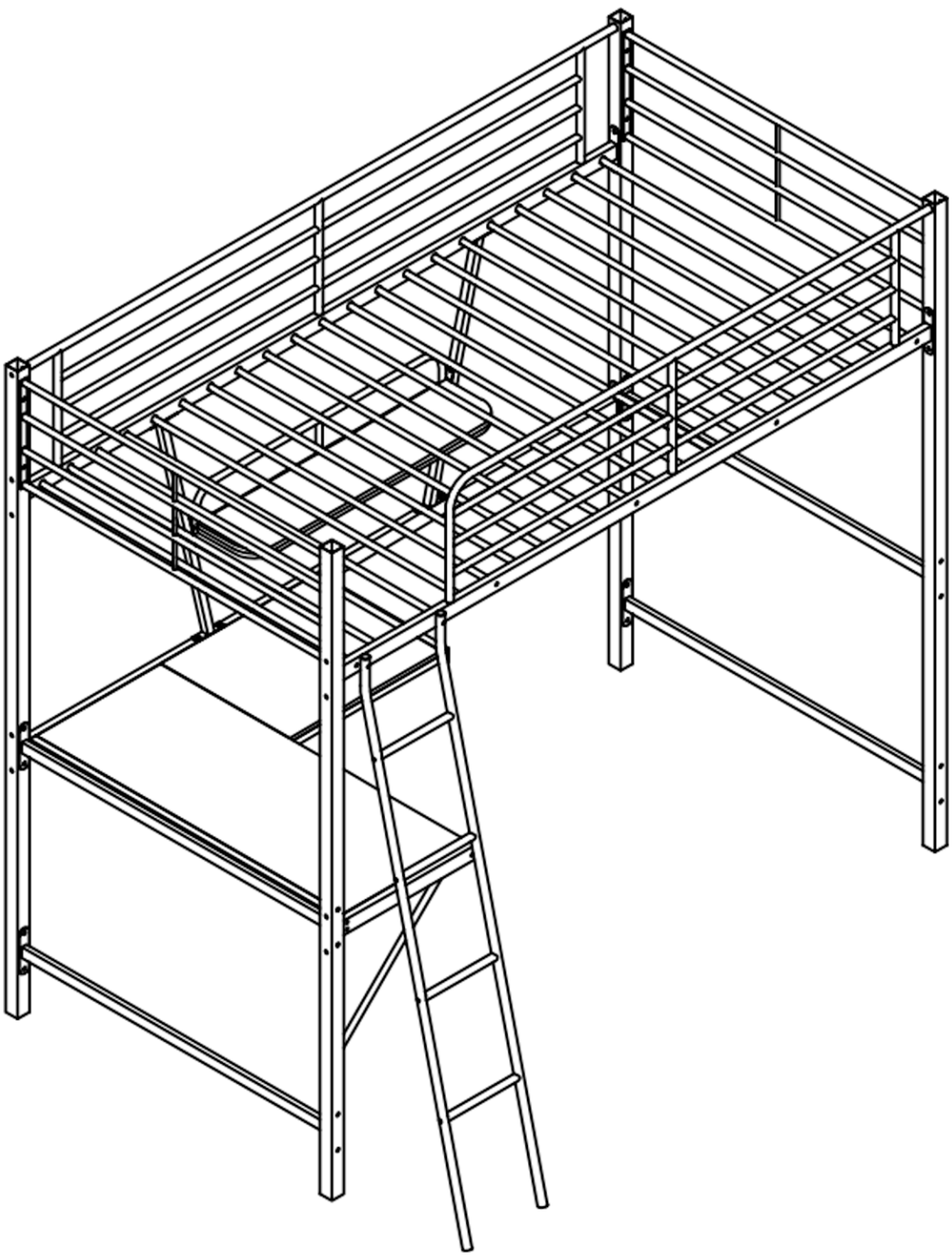

WF295285

SAFETY WARNINGS AND GENERAL NOTES

1. Follow the information on the warnings on the bunk bed end structure and on the carton. Do not remove the warning label from the bed.
2. Always use the recommended size mattress on mattress support, or both, to help prevent the likelihood of entrapment or falls.
3. Do not allow children under 6 years of age to use the upper bunk.
4. Periodically check and ensure the guardrail, ladder and other components are in their proper position, free from damage, and all connectors are tight.
5. Do not allow horseplay on or under beds.
6. Always prohibit jumping on the bed.
7. Prohibit more than one person on upper bunk.
8. Always use the ladder for entering and leaving the upper bunk.
9. Do not use substitute parts. Contact the manufacturer or dealer for replacement parts.
10. Use of a night-tight may provide added safely precaution for a child using the upper bunk.
11. Always use guardrails on both long sides of the upper bunk.
12. If the bunk bed will be placed next to a wall, the guardrail that runs the full length of the bed should be placed against the wall to prevent entrapment between the bed and the wall. The use of water or sleep flotation mattresses is prohibited.
13. STRANGULATION HAZARD-Never attach or hang items to any part of the bunk bed that are not designed for use with the bed.
14. Keep these instructions for future reference.
15. We recommend assembling your bunk bed on the shipping carton to protect your floor or carpet.
16. Be certain all staples are out of the box before beginning assembly on the shipping carton.
17. USE ONLY MATTRESSES WHICH ARE AS THE TABLE BELOW ON UPPER BUNK.

Up bed(bunk bed and tribed included)

Bed type	Length	Width	Thickness
Twin Standard	74” – 75”	38.5’’	6’’

18. SURFACE OF MATTRESS MUST BE AT LEAST 5" (127MM) BELOW THE UPPER EDGE OF GUARDRAILS.
19. Replacement Parts:

Replacement Parts, including additional guardrails, may be obtained from any of our (GIGACLOUD TECHNOLOGY (USA) INC) dealers.

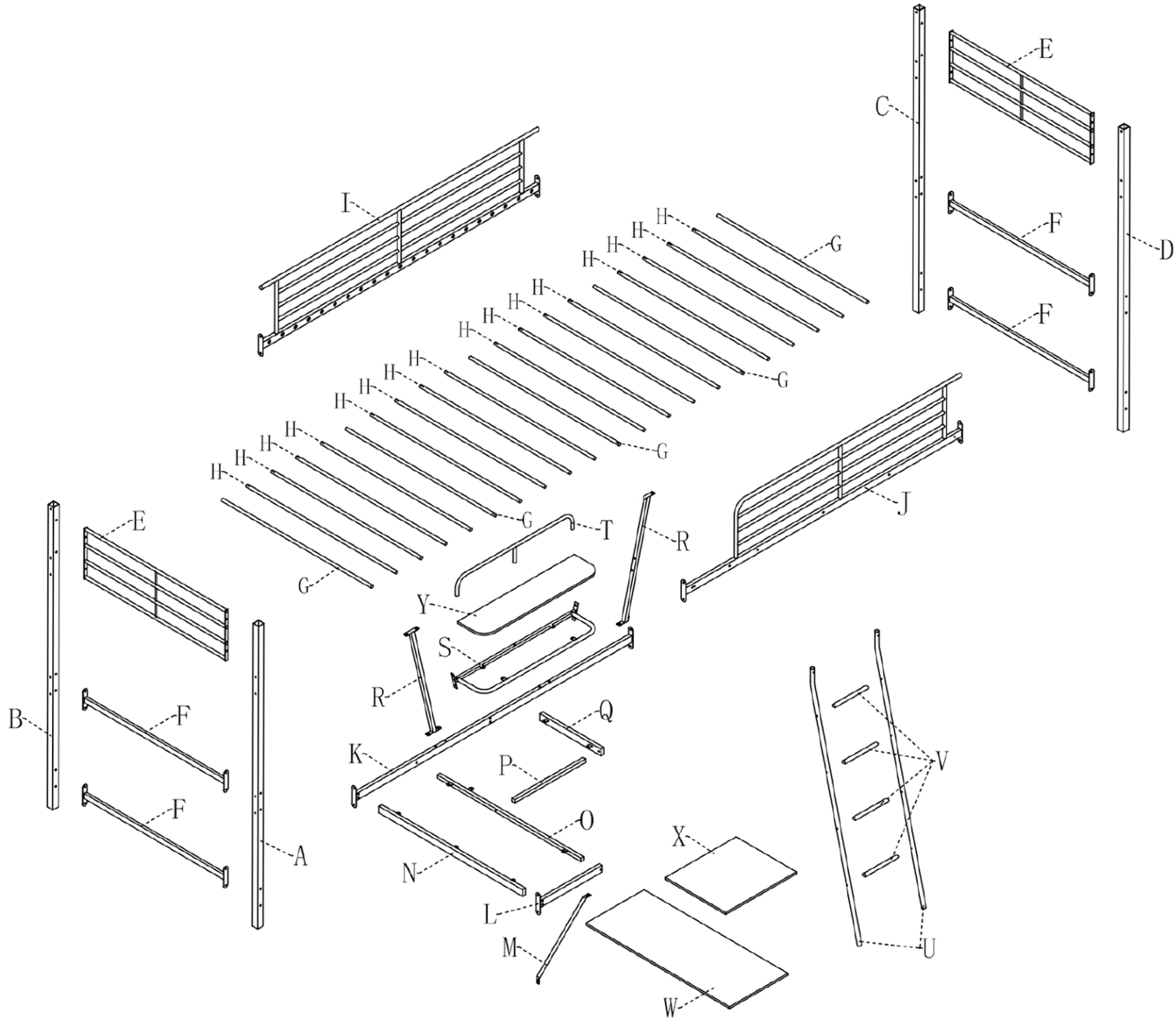
C
E
D
F
F
I
H
G
J
T
R
Y
S
R
Q
K
P
O
N
L
M
X
W
V
U
B
E
F
F
A

Parts List

A	B	C	D	E	F	G	H
				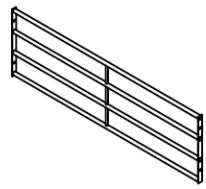	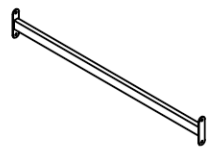	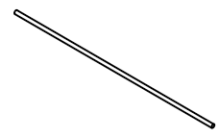	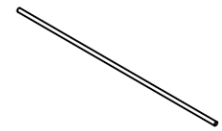
1PC	1PC	1PC	1PC	2PCS	4PCS	5PCS	16PCS

I	J	K	L
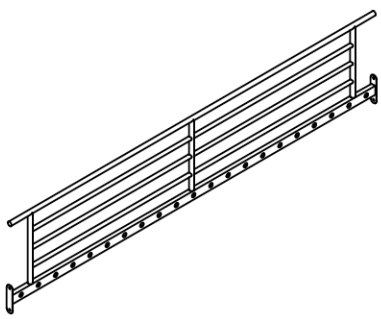	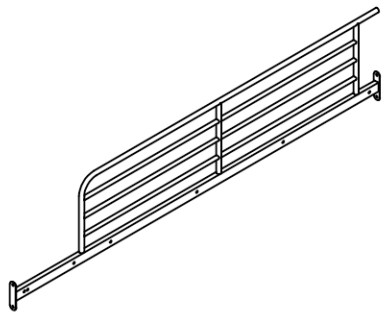	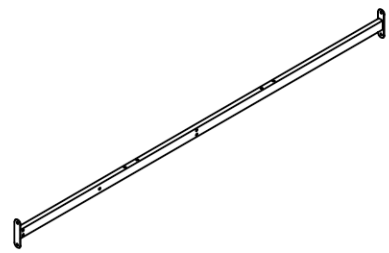	
1PC	1PC	1PC	1PC

M	N	O	P	Q	R	S	T
	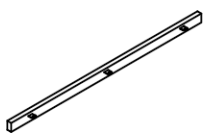	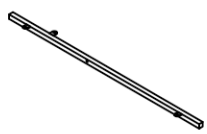				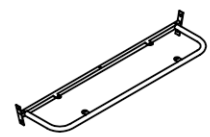	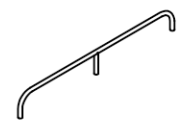
1PC	1PC	1PC	1PC	1PC	2PCS	1PC	1PC

U	V	W	X	Y
		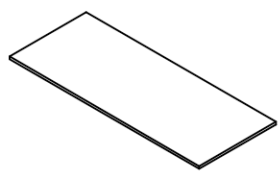	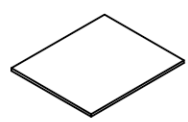	
2PCS	4PCS	1PC	1PC	1PC

Hardware List

a	b	c	d	e	f	g	h
							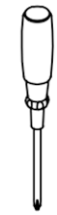
1/4*50 41PCS	1/4*35 27PCS	1/4*19 16PCS	42PCS	12PCS	2PCS	2PCS	1PC

V
38PCS

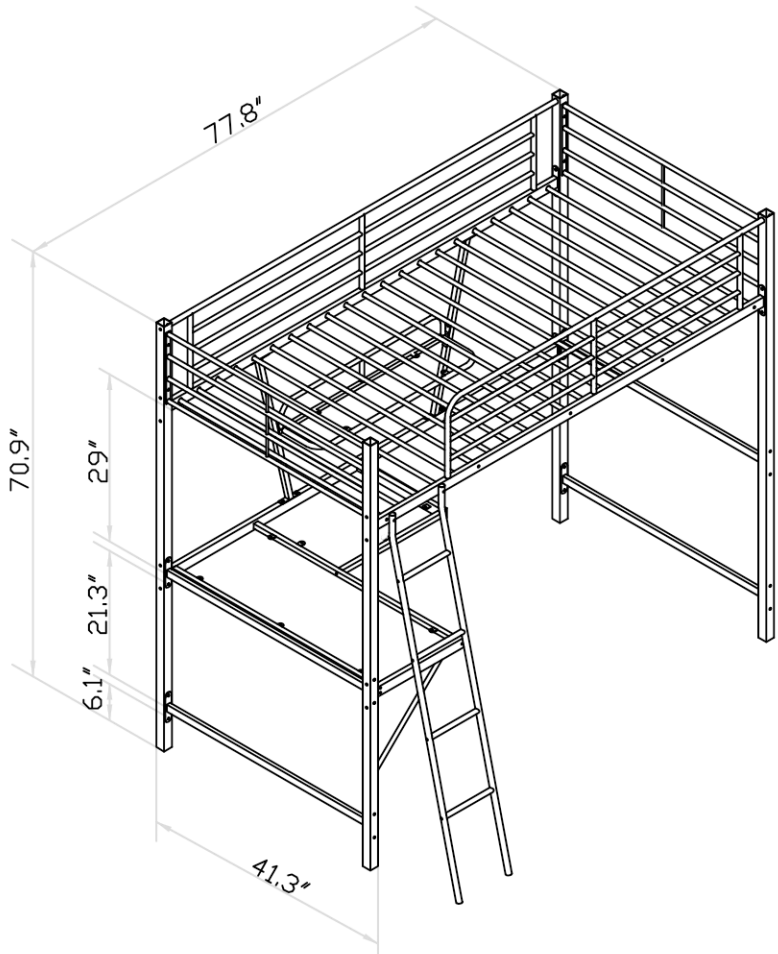
77.8″
70.9″
29″
21.3″
6.1″
41.3″

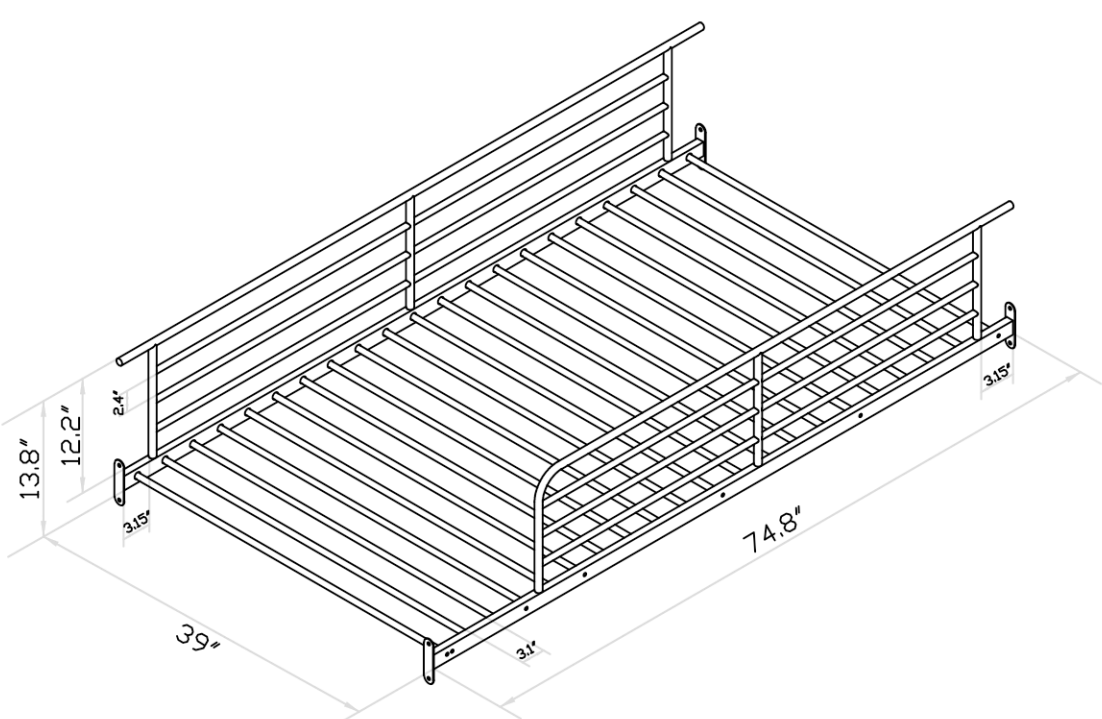
13.8″
12.2″
2.4″
3.15″
3.15″
39″
3.1″
74.8″

STEP 1:

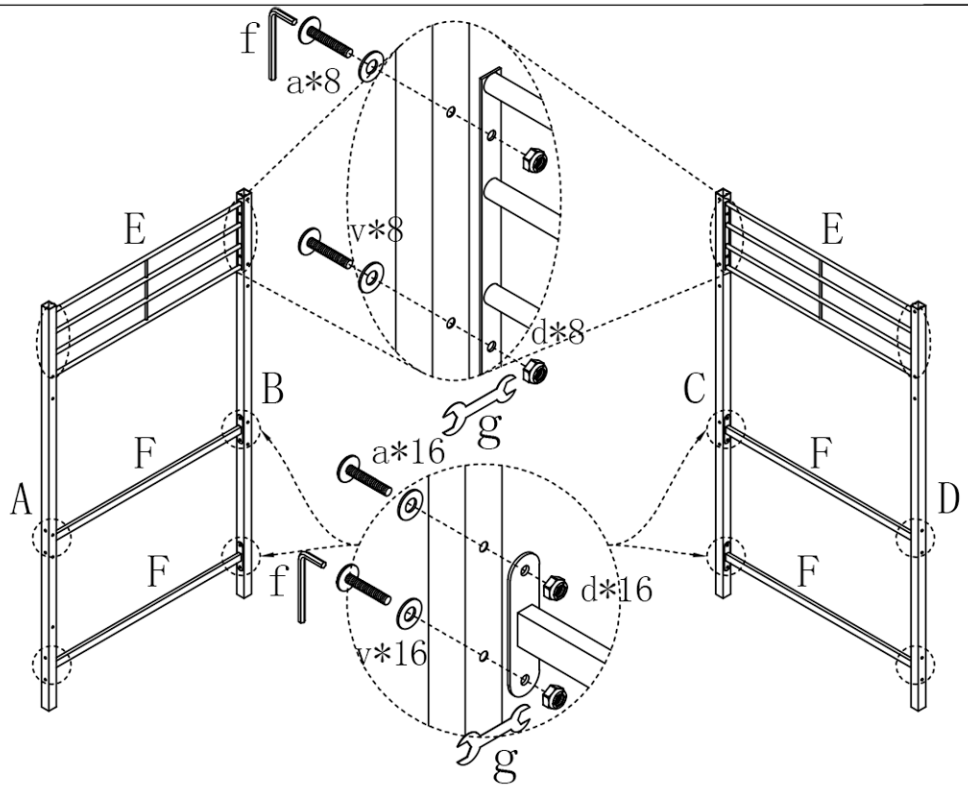

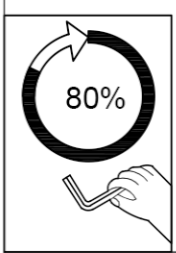

HARDWARE REQUIRED

STEP 2:

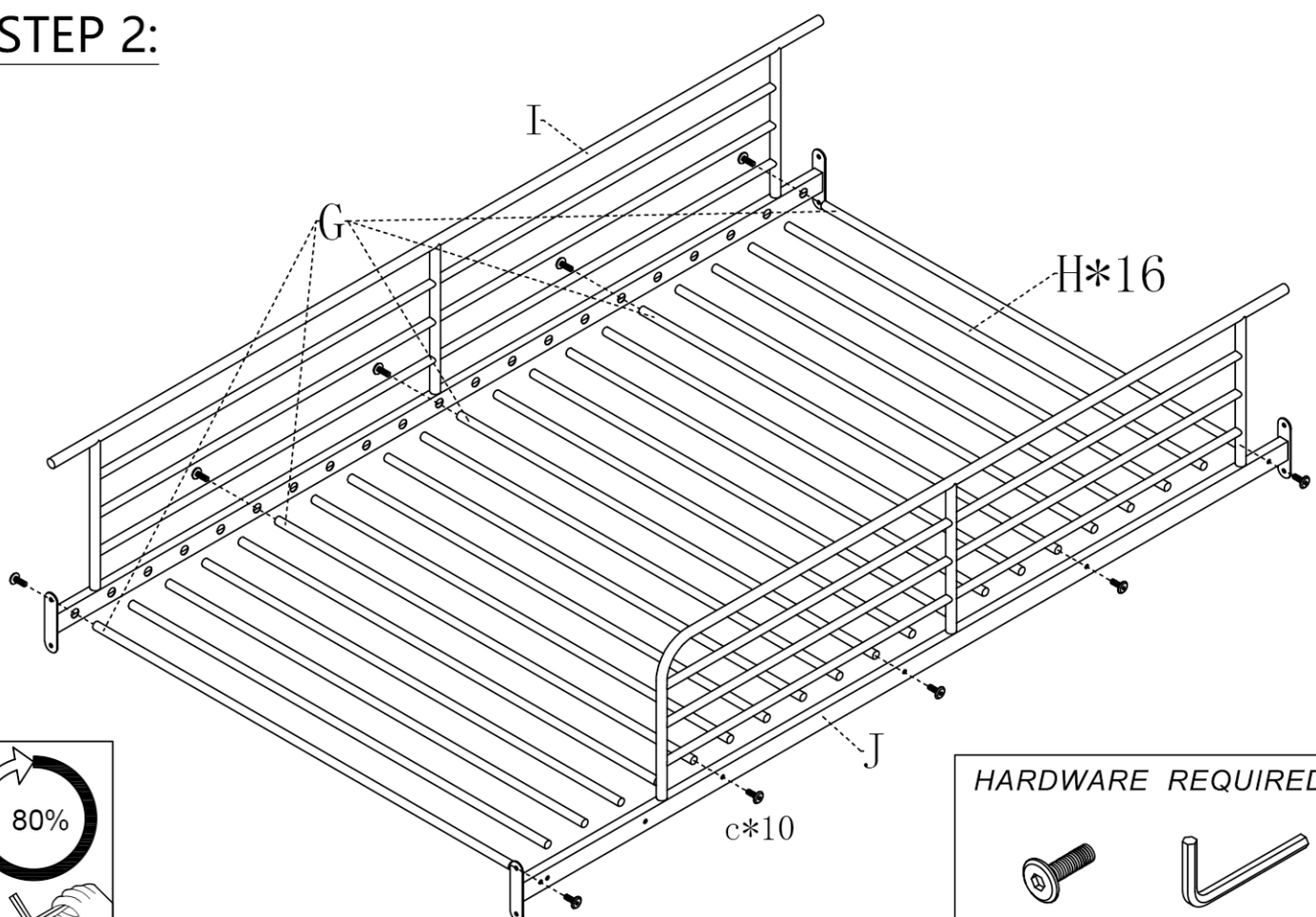

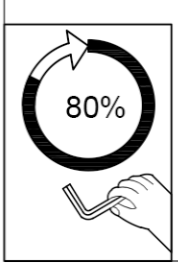

HARDWARE REQUIRED

STEP 3:

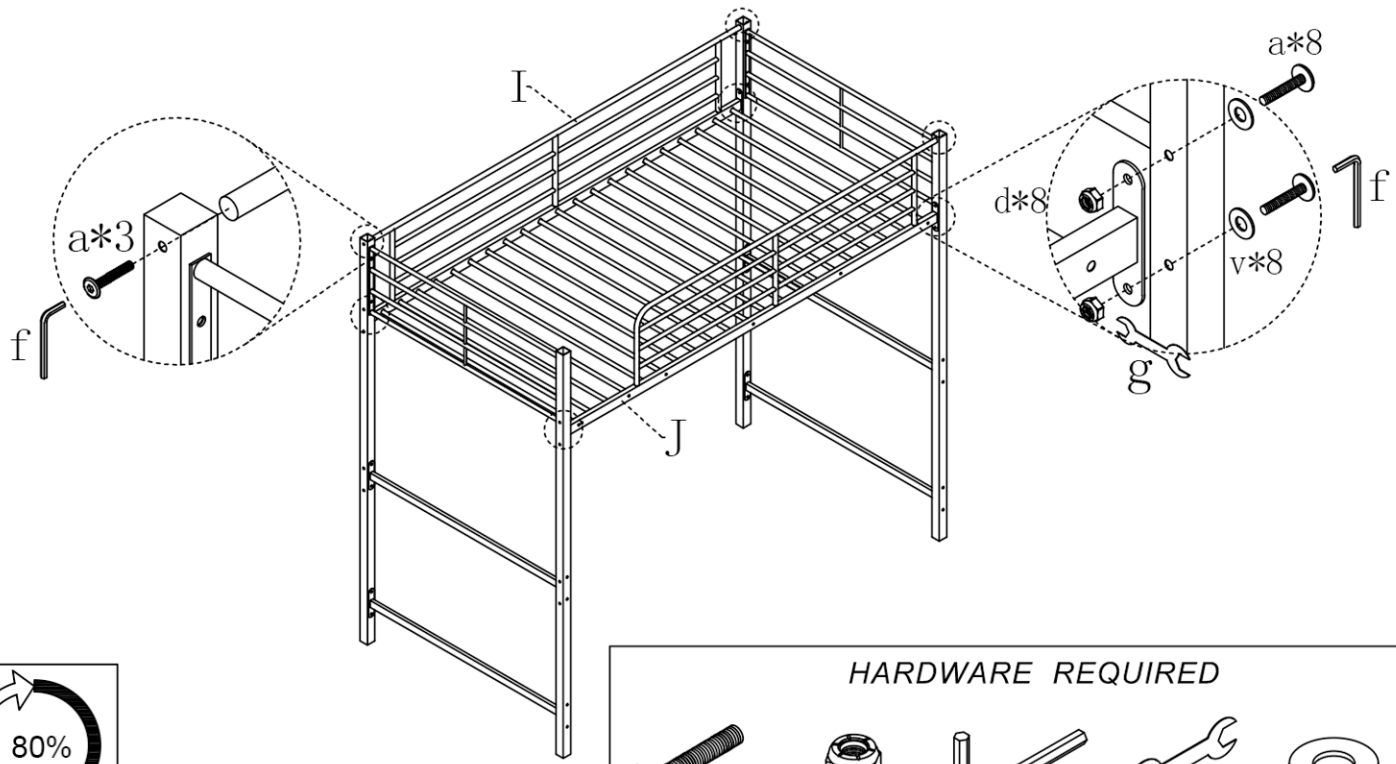

80%

HARDWARE REQUIRED

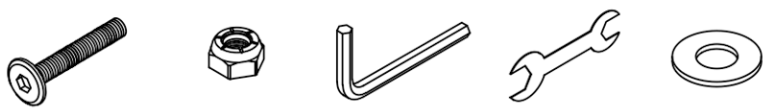

STEP 4:

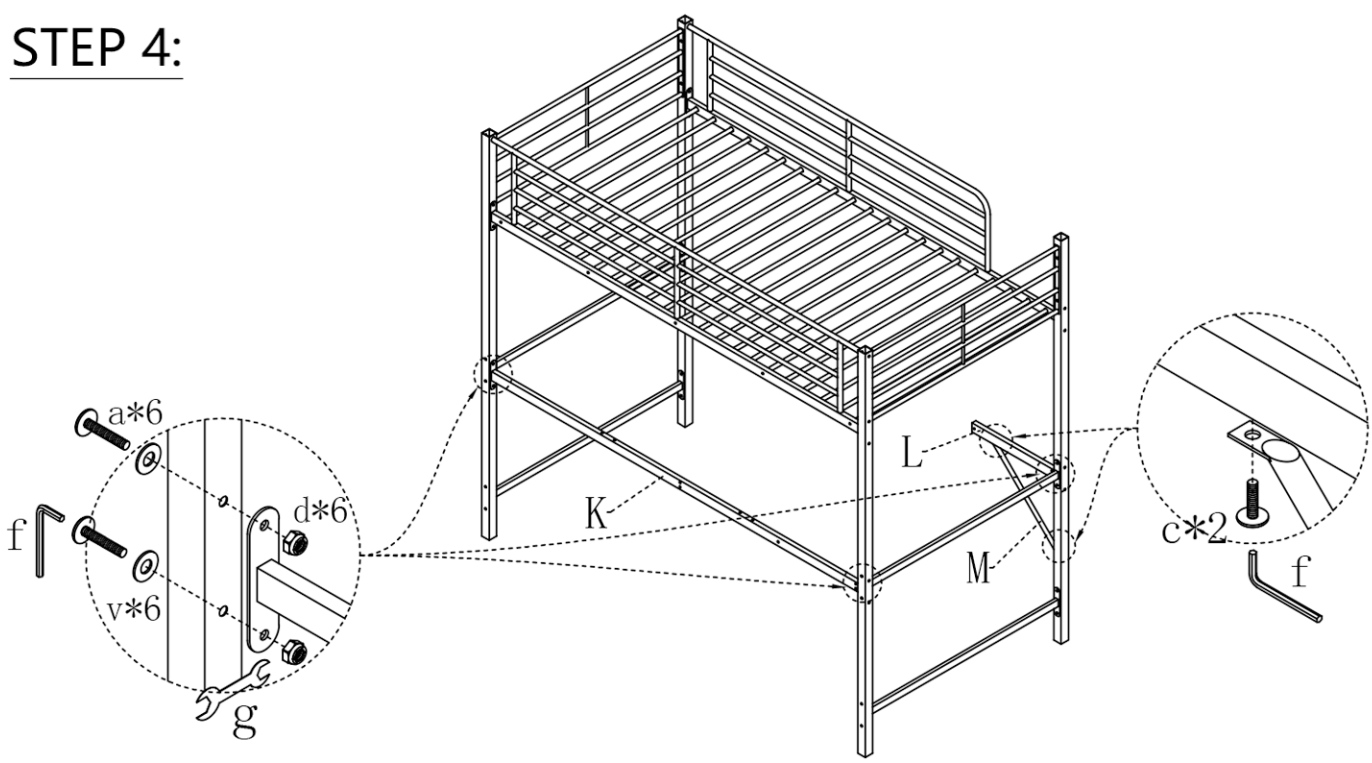

80%

HARDWARE REQUIRED

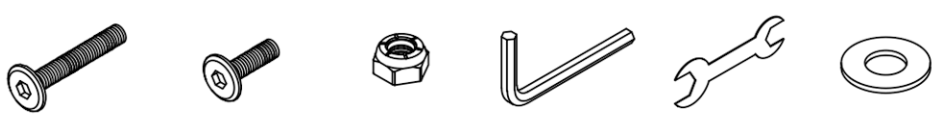

STEP 5:

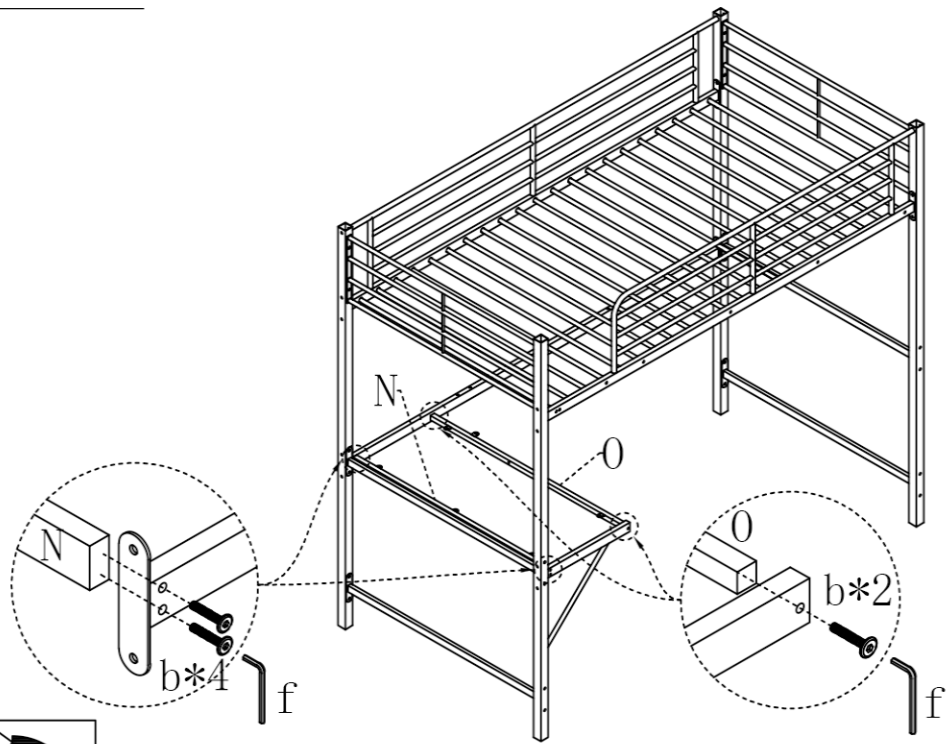

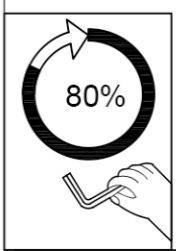

HARDWARE REQUIRED

b*6

f*1

STEP 6:

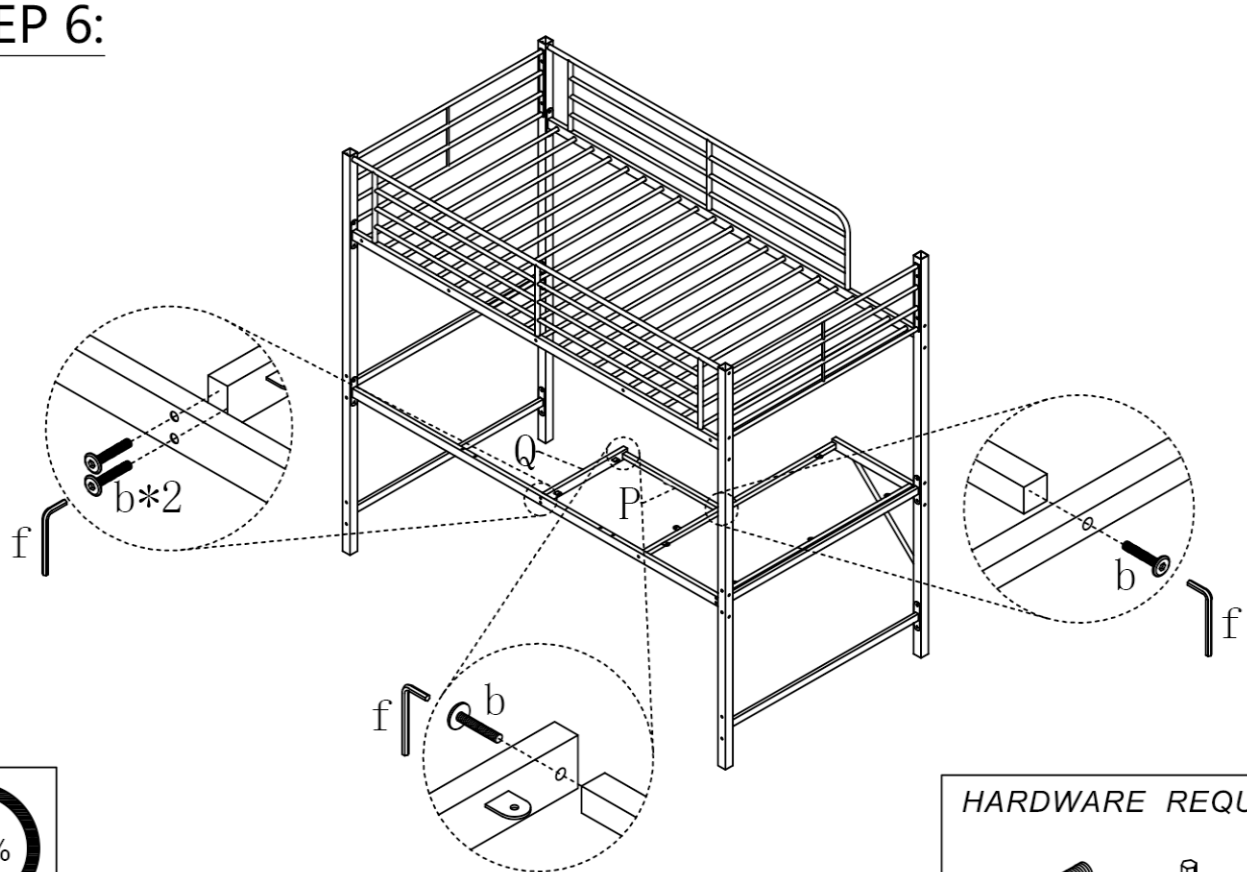

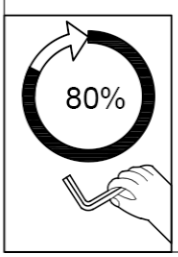

HARDWARE REQUIRED

b*4

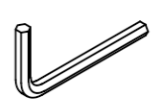
f*1

STEP 7:

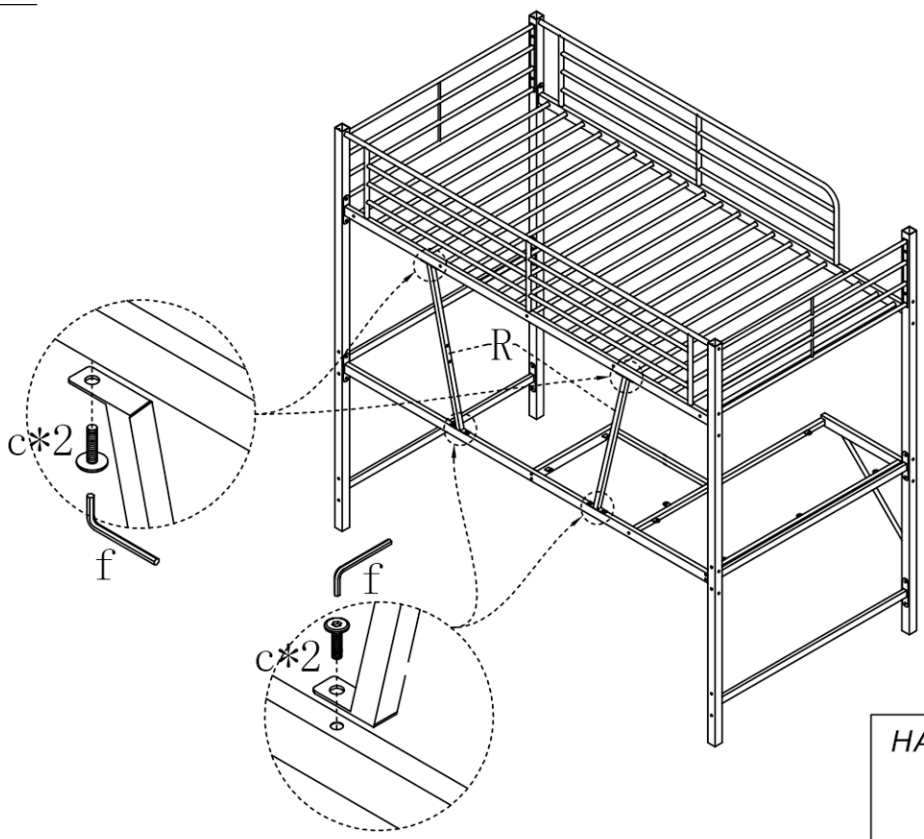

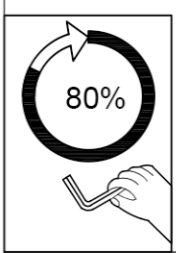

HARDWARE REQUIRED

*c*4*

*f*1*

STEP 8:

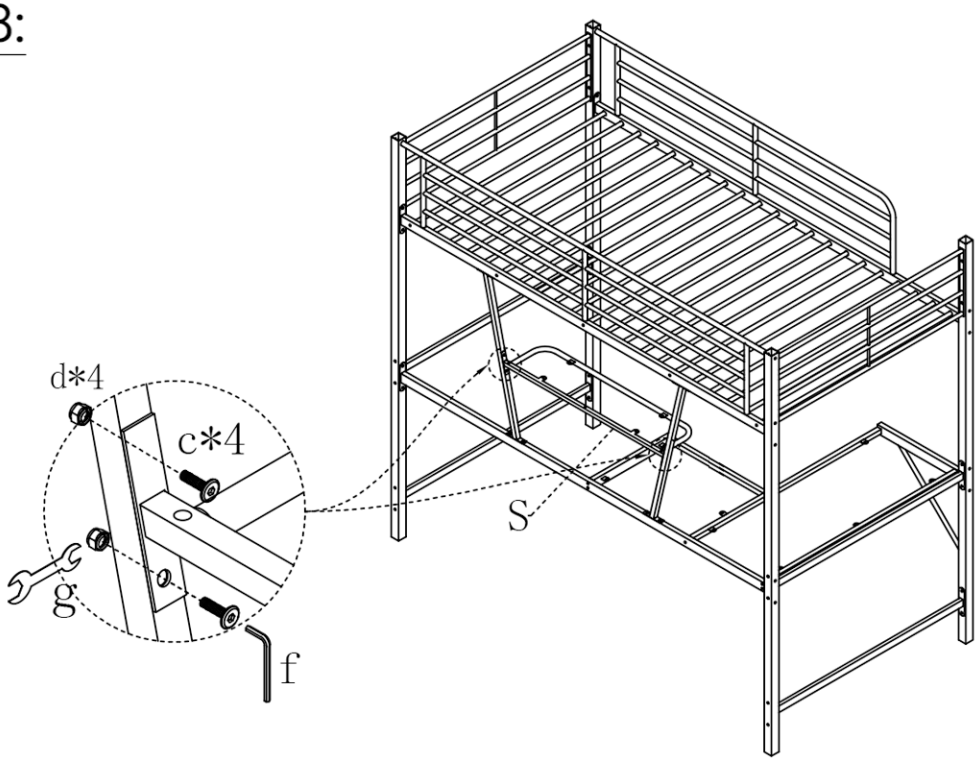

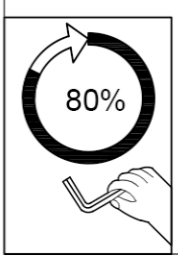

HARDWARE REQUIRED

*d*4*

*c*4*

*f*1*

*g*1*

STEP 9:

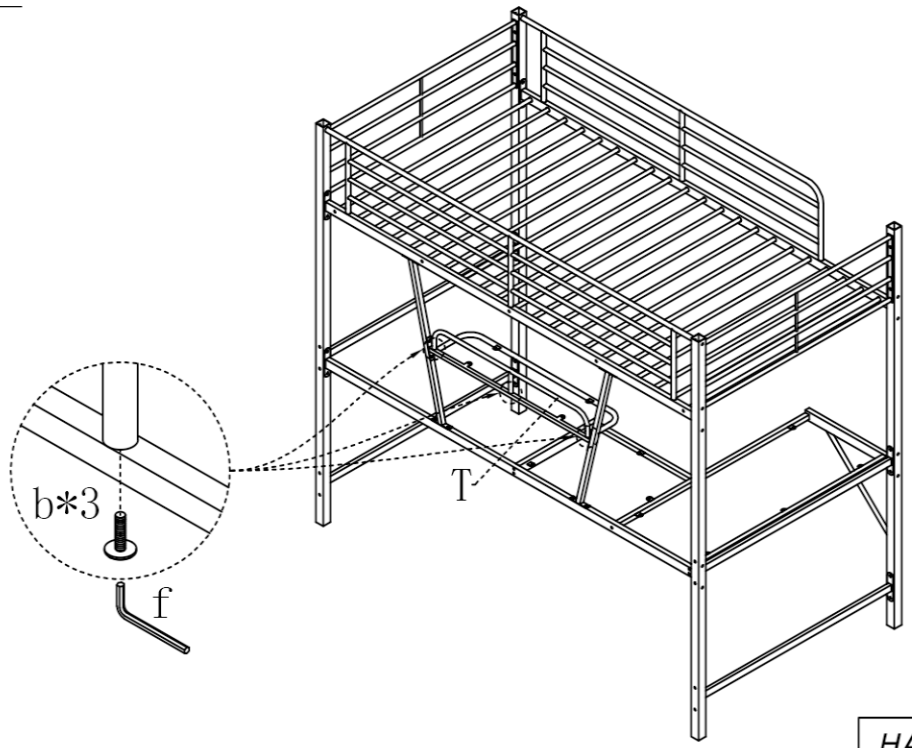

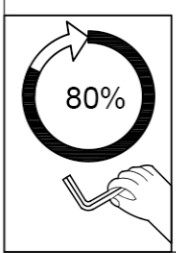

HARDWARE REQUIRED

*b*3*

*f*1*

STEP 10:

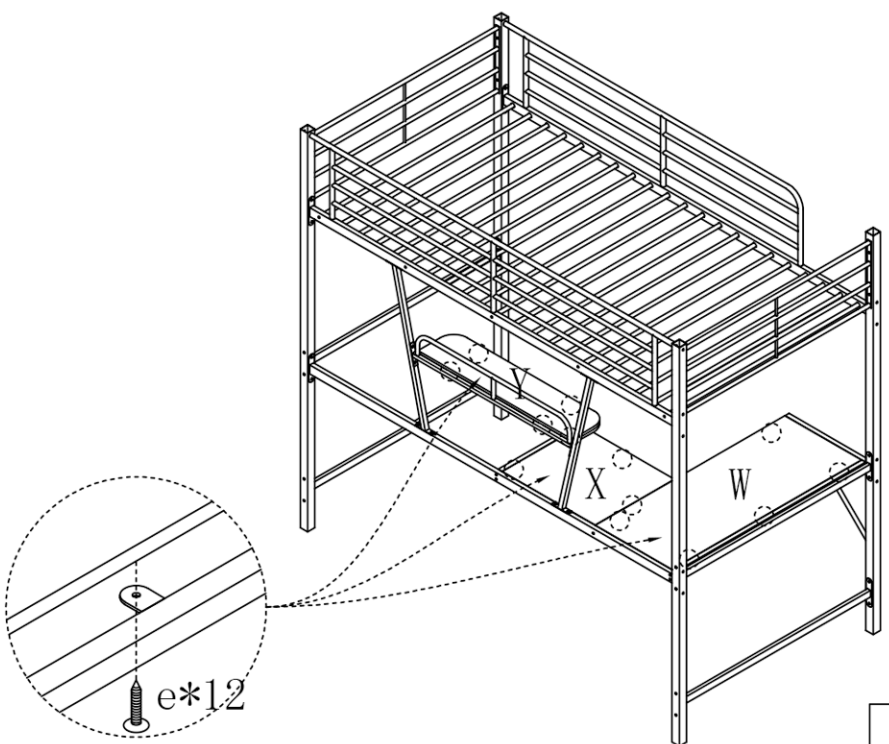

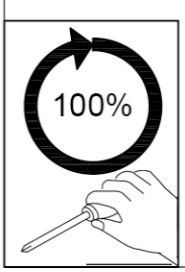

HARDWARE REQUIRED

*e*12*

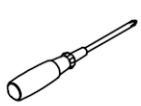

*h*1*

STEP 11:

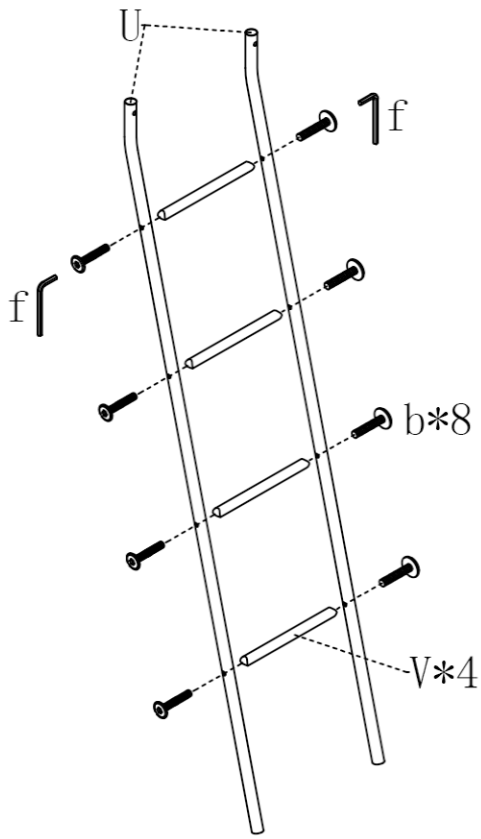

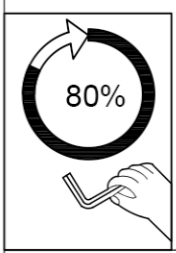

HARDWARE REQUIRED

*b*8*

*f*1*

STEP 12:

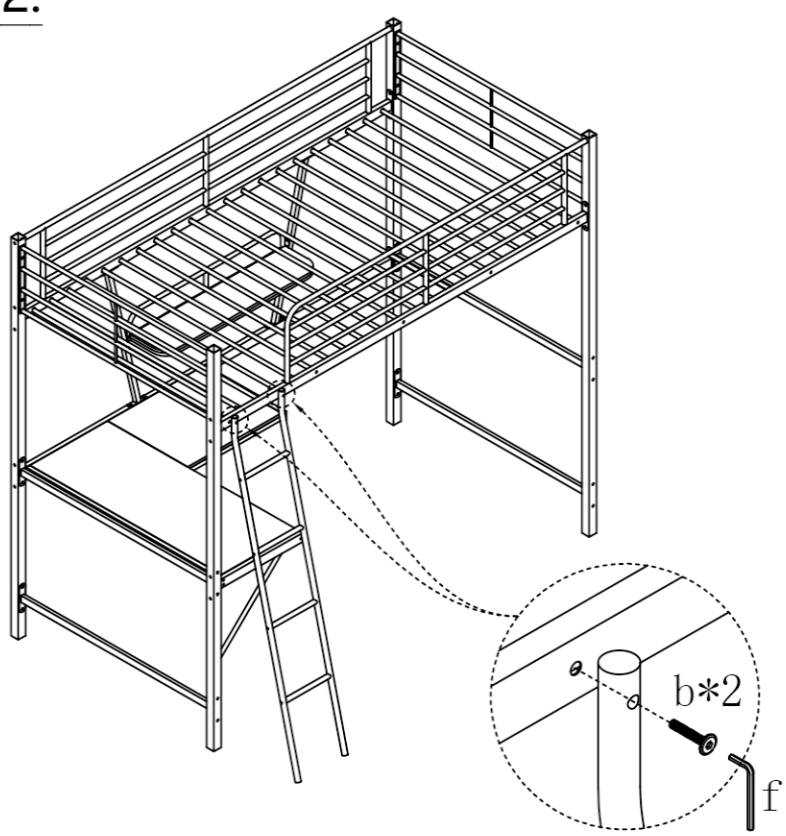

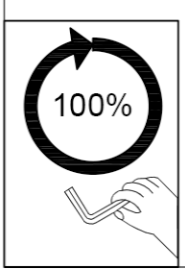

HARDWARE REQUIRED

*b*2*

*f*1*
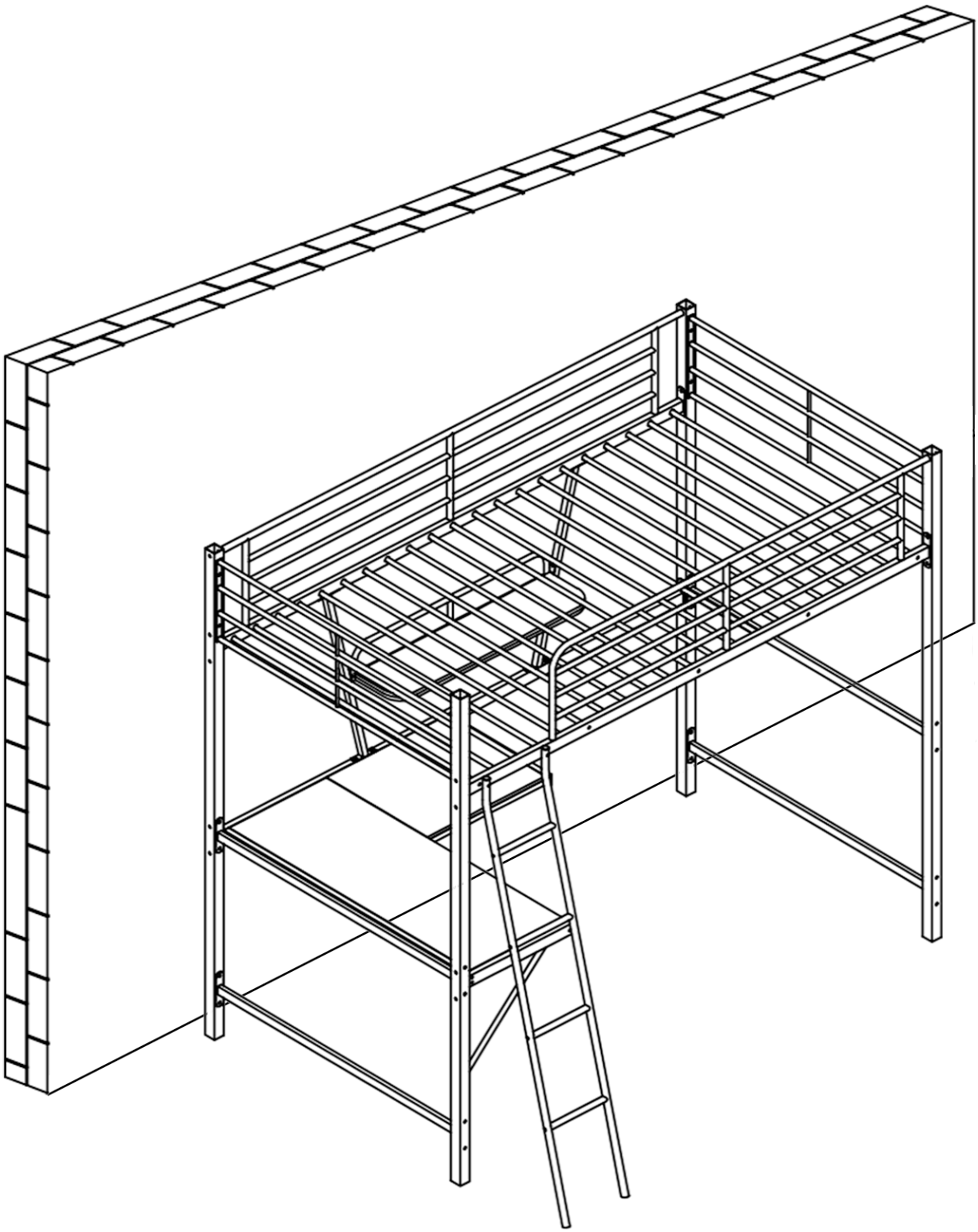
STEP 13: