ASSEMBLY INSTRUCTIONS

Twin over Twin with trundle

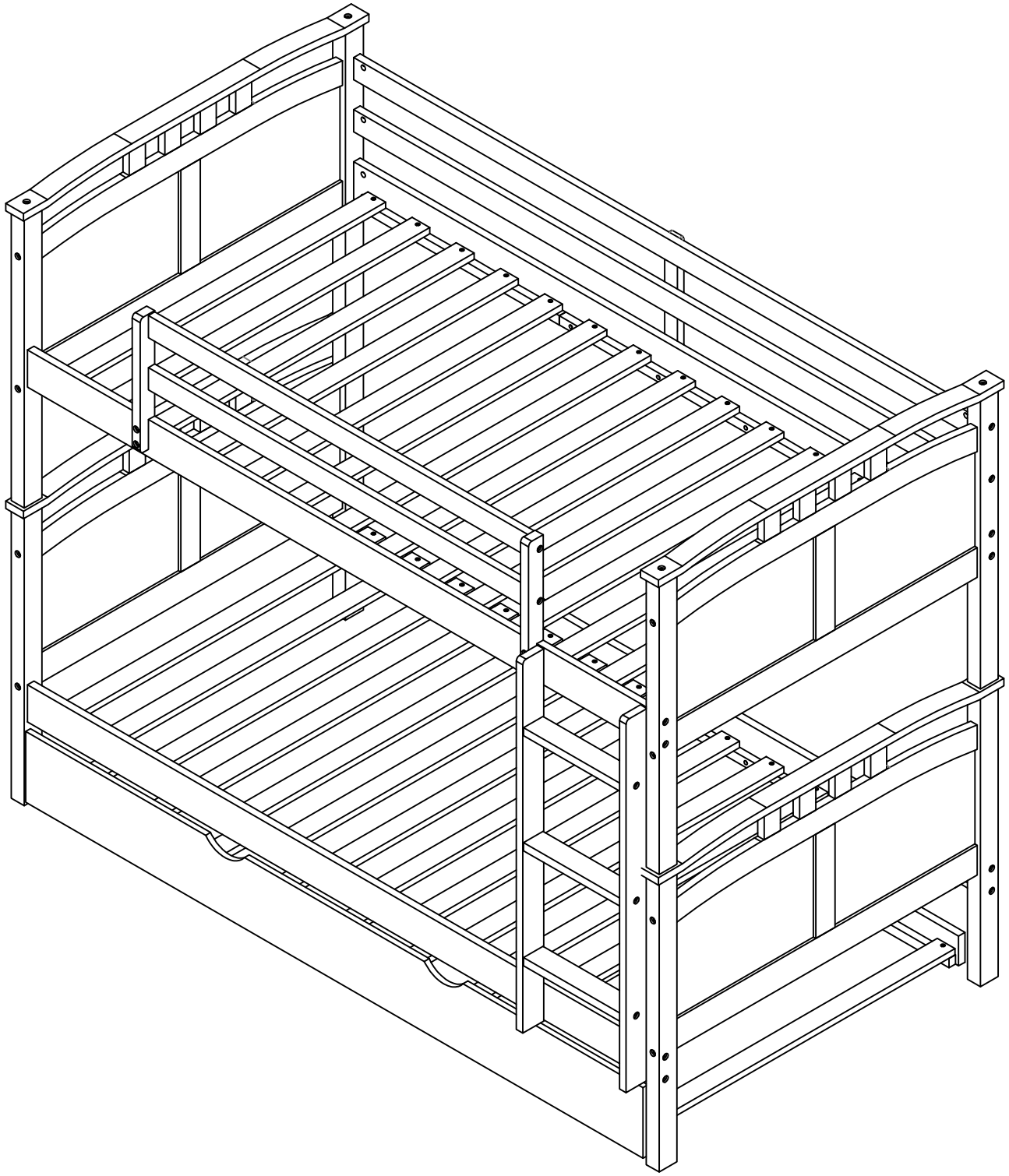

WF295218/WF295219

SAFETY WARNINGS

1. This bed is designed for use only mattress(es) meeting the following specifications on the upper bunk, and lower bunk:

Upper bunk

Bed Type	Length	Width	Thickness
Twin Standard	74” - 75”	38 ¹/ ²”	6''

Lower bunk

Bed Type	Length	Width	Thickness
Twin Standard	74” - 75”	38 ¹/ ²”	6''

2. Replacement parts, including additional guardrails, may be obtained from any of our GIGACLOUD TECHNOLOGY (USA) INC.
3. Follow the information on the warnings appearing on the upper bunk bed end structure and on the carton. Do not remove warning label from bed.
4. Always use the recommended size mattresses or mattress supports, or both, to help prevent the likelihood of entrapment or falls.
5. Surface of the mattress must be at least 5 in. (127 mm) below the upper edge of guardrails.
6. Do not allow children under 6 years of age to use the upper bunk.
7. Periodically check and ensure that the guardrail, ladder, and other components are in their proper position, free from damage, and that all connectors are tight.
8. Do not allow horseplay on or under the bed and prohibit jumping on the bed
9. Always use the ladder for entering and leaving the upper bunk.
10. Do not use substitute parts. Contact the manufacturer or dealer for replacement parts.
11. Use of a night light may provided added safety precaution for a child using the upper bunk.
12. Always use guardrails on both long sides of the upper bunk. If the bunk bed will be placed next to the wall, the guardrail that runs the full length of the bed should be placed against the wall to prevent entrapment between the bed and wall.
13. The use of water or sleep flotation mattresses is prohibited.
14. STRANGULATION HAZARD – Never attach or hang items to any part of the bunk bed that are not designed for use with the bed; for example, but not limited to, hook, belts and jump ropes.
15. Keep these instructions for future reference
16. We recommend assembling your bunk bed on a shipping carton to protect your floor or carpet
17. Be certain all staples are out of the box before beginning assembly on the shipping carton
18. Prohibit more than one person on upper bunk

DETAIL VIEW

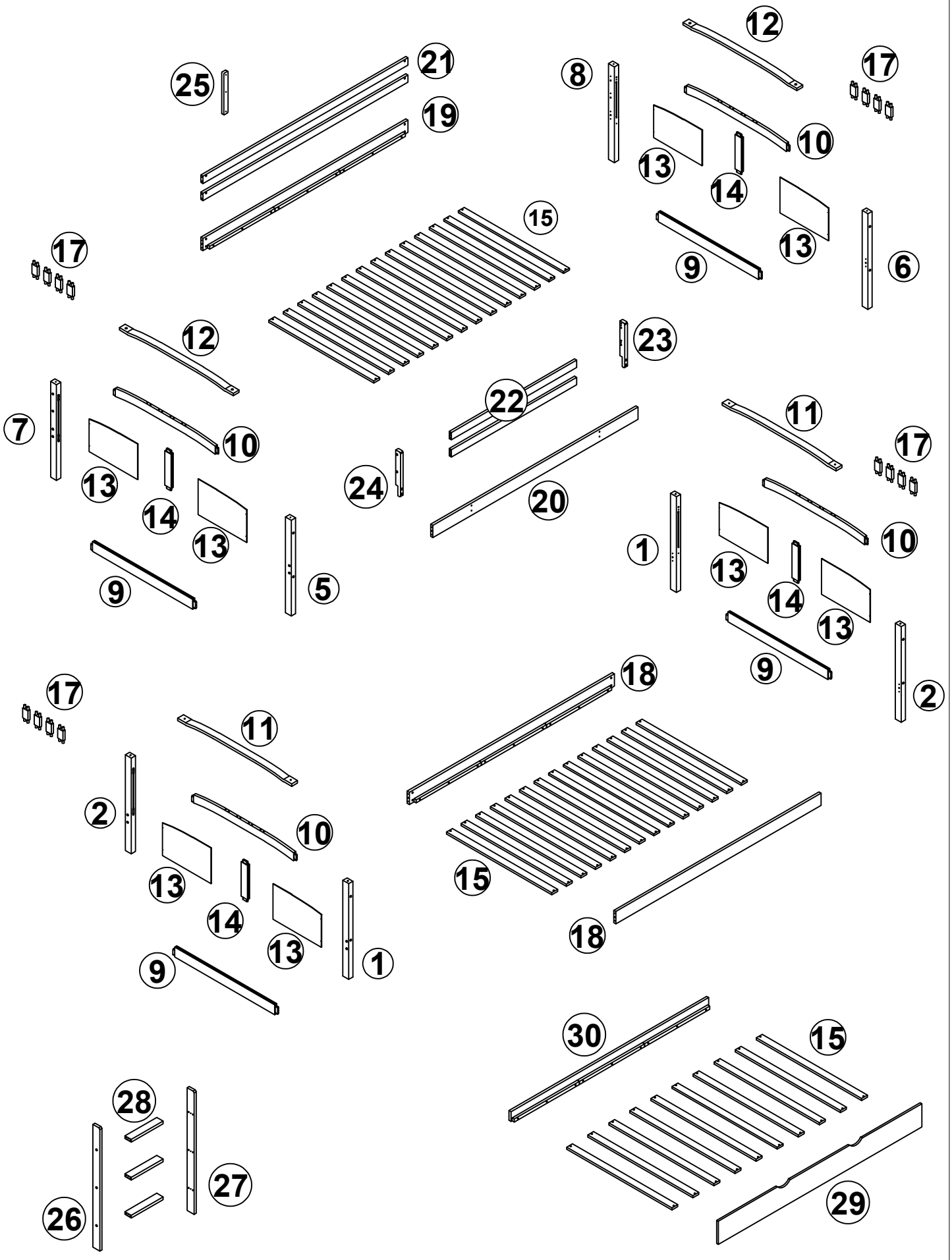

12
17
8
21
25
19
10
13
14
15
13
17
9
6
12
23
22
7
10
11
17
13
24
20
14
13
10
1
13
5
9
14
13
9
2
18
17
11
2
10
15
13
14
18
13
1
9
30
15
28
27
26
29

PART LISTS : WF295218

9 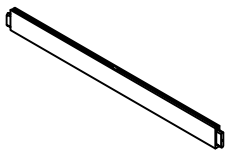 Grooved crossbar (L/R) - (4pcs)	10 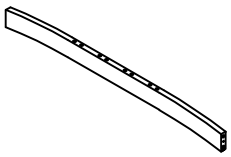 Grooved curved bar (L/R) - (4pcs)	13 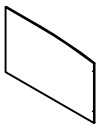 Panel - (8pcs)
17 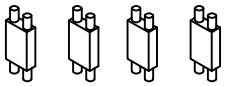 Decoration piece (L/R) - (16pcs)	22 Upper crossbar - (2pcs)	25 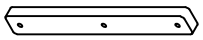 Beam brace - (1pc)
23 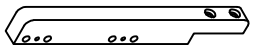 Shoulder brace (left) - (1pc)	24 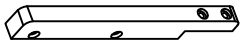 Shoulder brace (right) - (1pc)	28 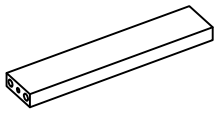 Stairs bar - (3pcs)
15 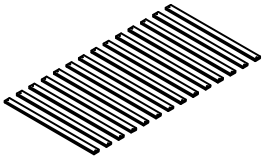 Slats - (38pcs)	27 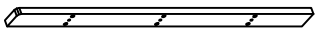 Foot of stairs (right) - (1pc)	26 Foot of stairs (left) - (1pc)

PART LISTS : WF295219

1 Lower leg (L/R) - (2pcs)	2 Lower leg (L/R) - (2pcs)	5 Upper leg (left) - (1pc)
6 Upper leg (left) - (1pc)	7 Left upper leg (back) - (1pc)	8 Right upper leg (back) - (1pc)
18 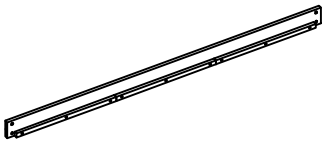 Lower shoulder (F/B) - (2pcs)	19 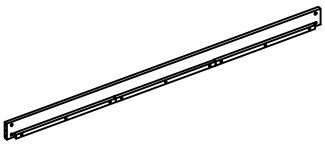 Upper shoulder (back) - (1pc)	20 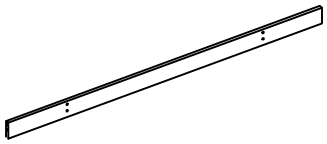 Upper shoulder (front) - (1pc)
11 Bottom cover bar - (2pcs)	12 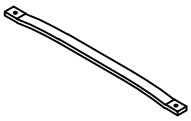 Top cover bar - (2pcs)	14 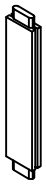 Grooved middle bar - (4pcs)
21 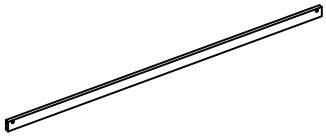 Upper crossbar - (2pcs)	29 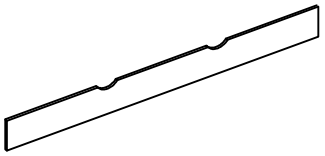 Drawer front - (1pc)	30 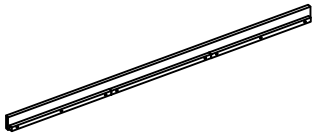 Shoulder behind the drawer - (1pc)

HARDWARE LISTS : WF295219

A Hex-Head bolt: Ø1/4"*65mm - (4pcs)	B 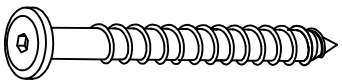 Hex-Head bolt: Ø1/4"*85mm - (16pcs)	C 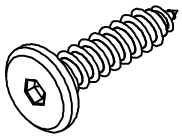 Hex-Head bolt: Ø6"*30mm - (3pcs)
D Hex-Head bolt: Ø1/4"*80mm - (20pcs)	E 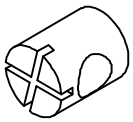 Hole bolt: Ø1/4*13 - (24pcs)	W 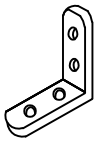 Pass L: Ø1/4" - (3pcs)
K Allen key - (1pc)	G 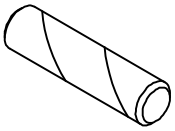 Wood dower: Ø10*30 - (32pcs)	F 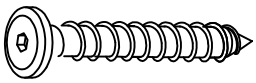 Hex-Head bolt: Ø6"*50mm - (10pcs)
J Screw: Ø4*30mm (76pcs)	M 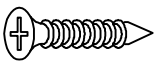 Screw: Ø4*15mm - (28pcs)	H 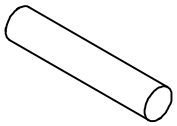 Metal dower: Ø10*90mm - (4pcs)
N 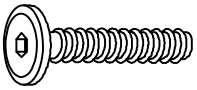 Hex-Head bolt: Ø1/4"*30mm - (4pcs)	P Wheels: Ø35 - (4pcs)	Q 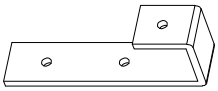 Hook : (4pcs)
R 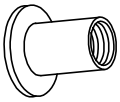 Knot: Ø1/4" - (4pcs)	O 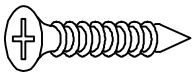 Screw: Ø4"*40mm - (16pcs)	L 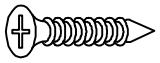 Screw: Ø4*20mm - (12pcs)
T 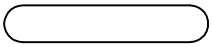 Foam stick : 90*17*2mm (4pcs)		

Step 1 :

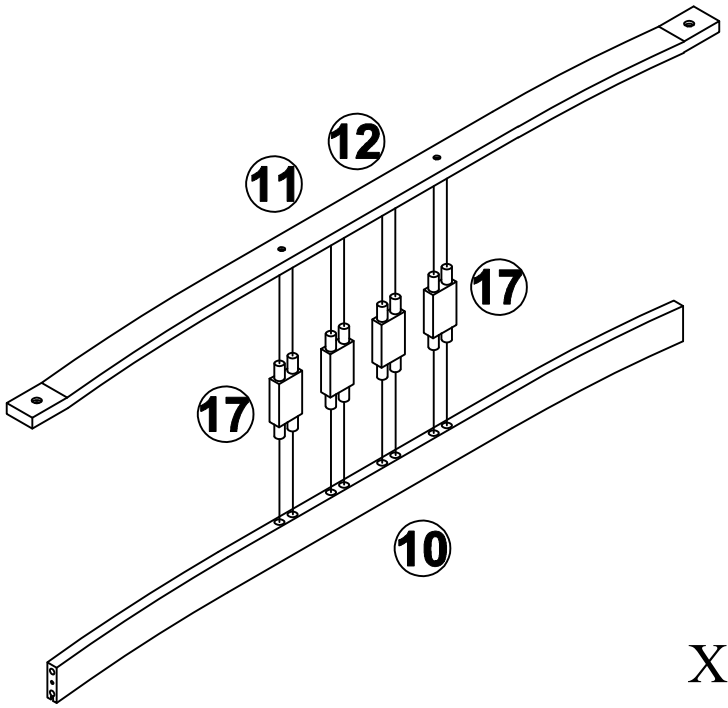

X4

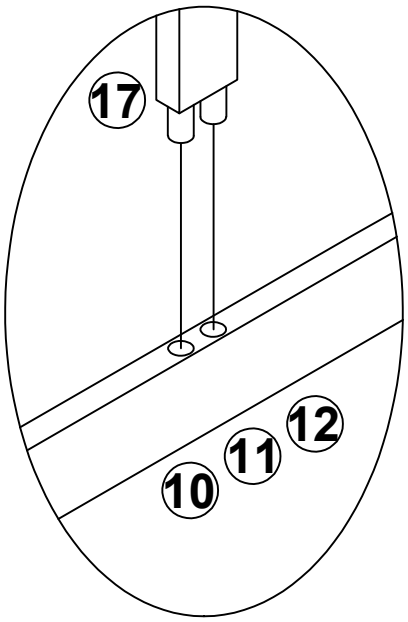

Step 2 :

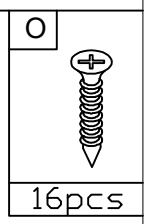

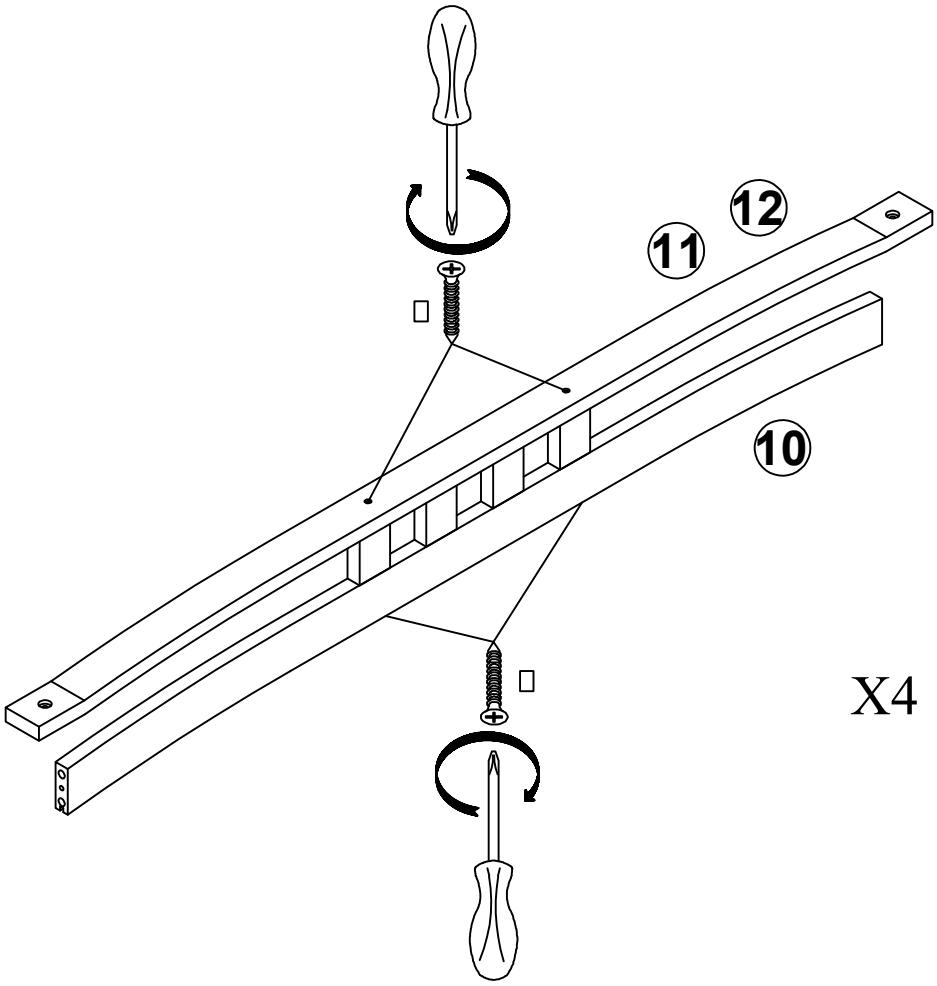

X4

Step 3 :

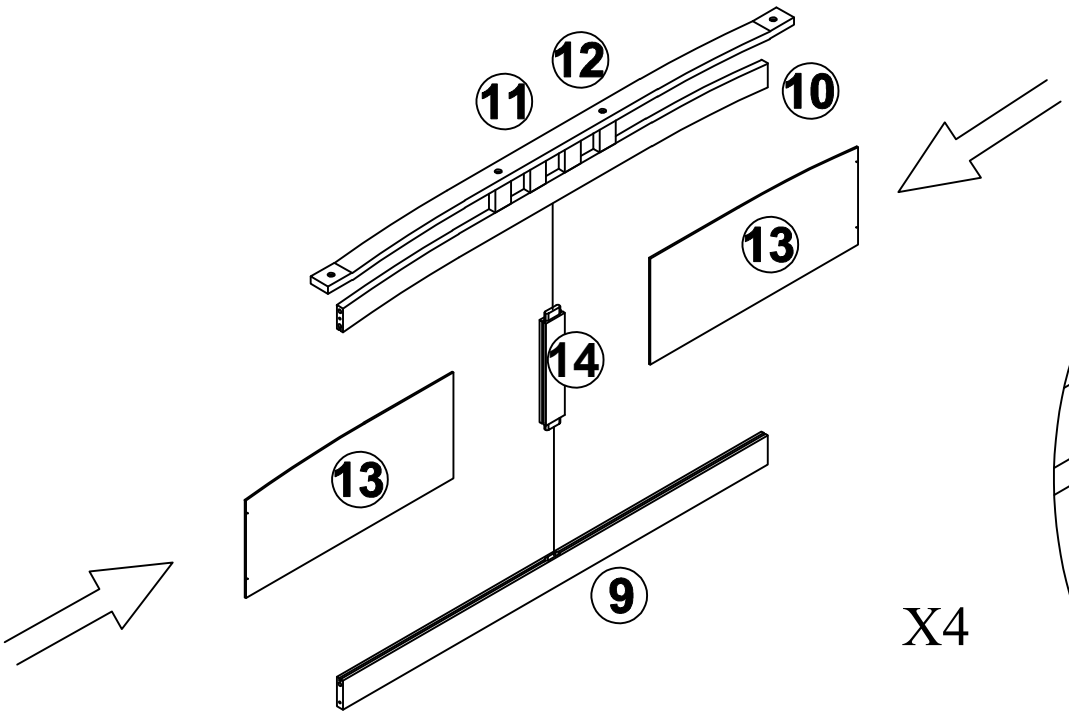

X4

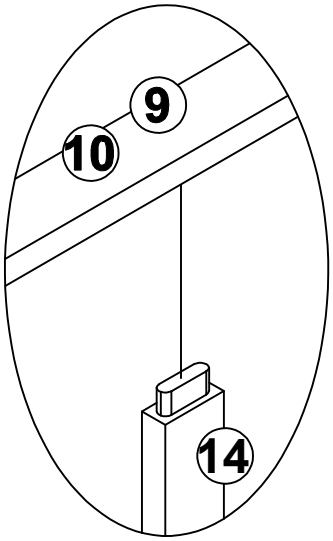

Step 4 :

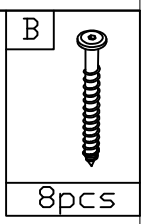

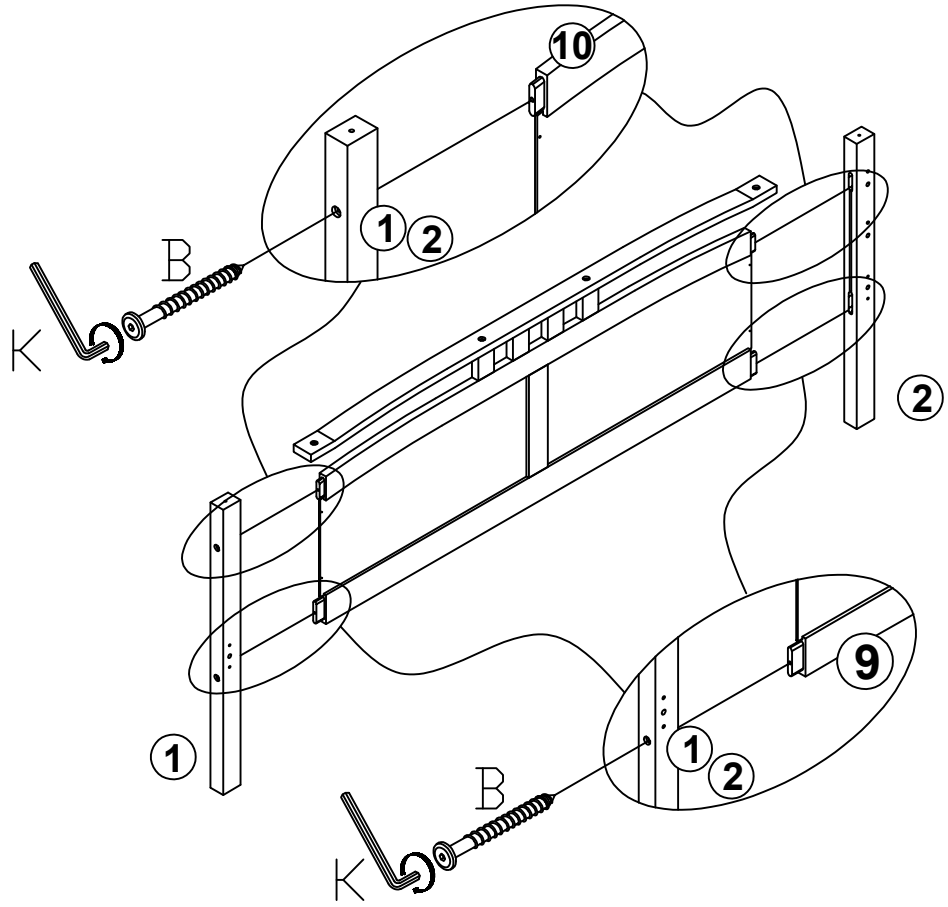

X2

Step 5 :

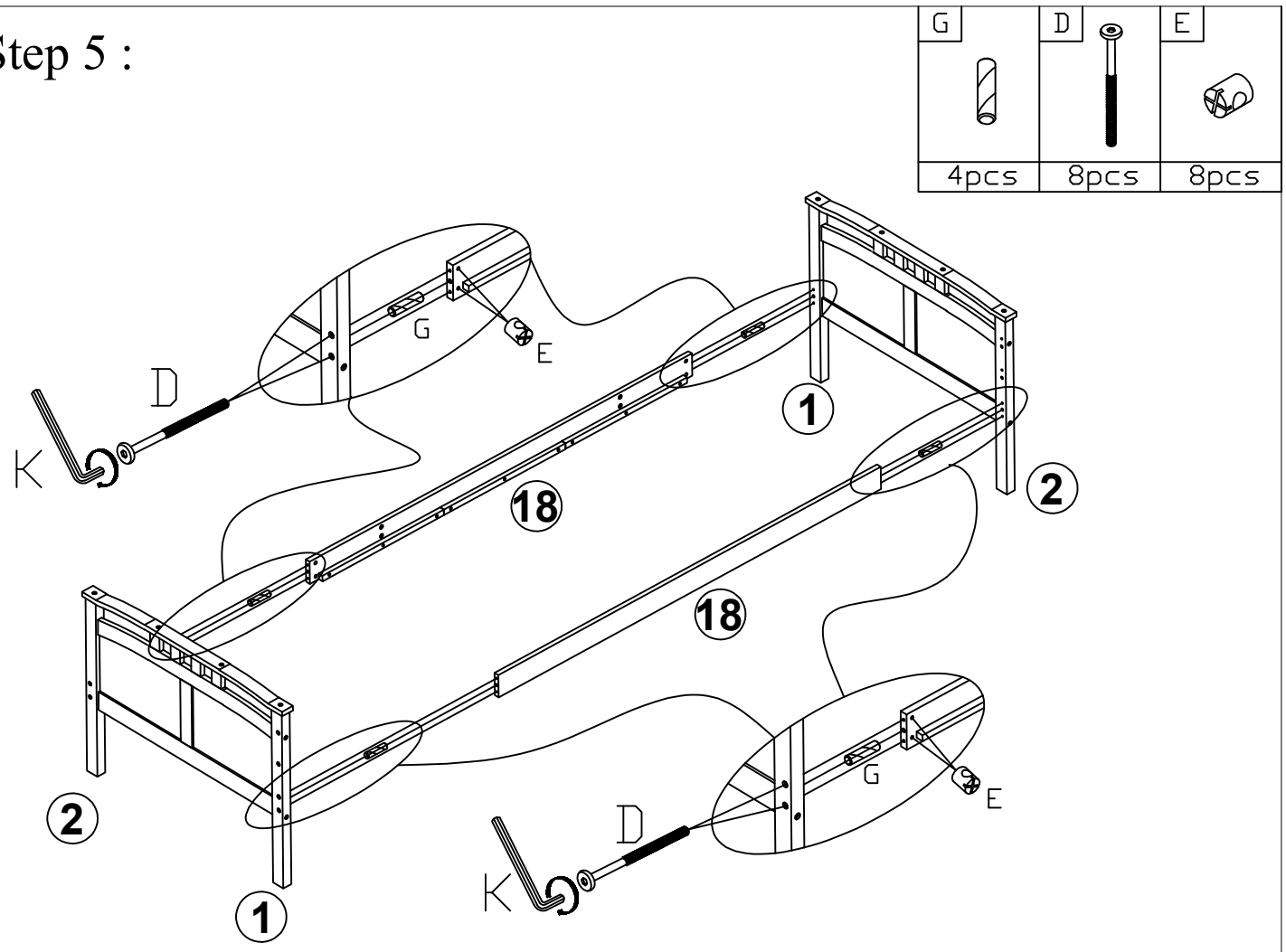

Step 6 :

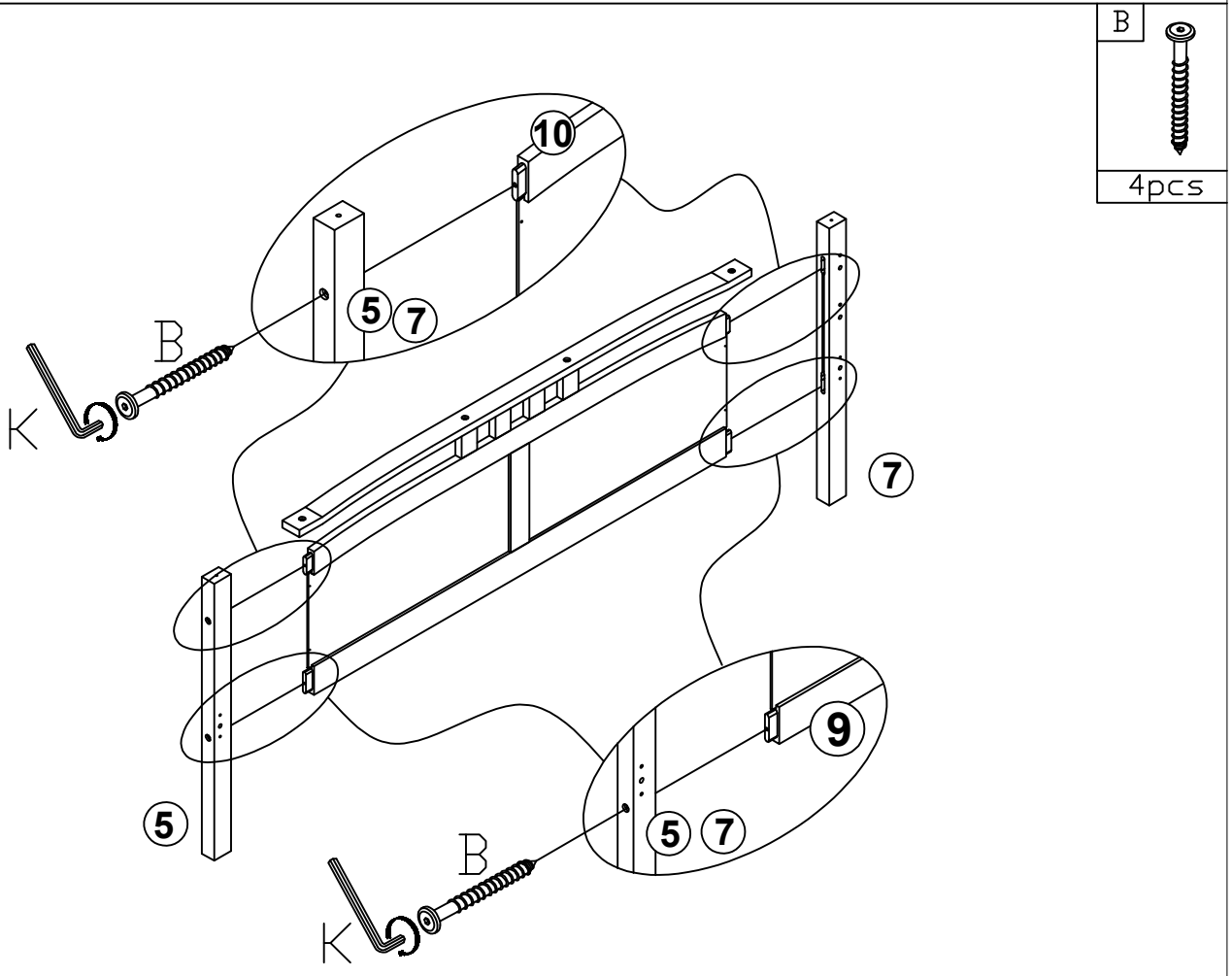

Step 7 :

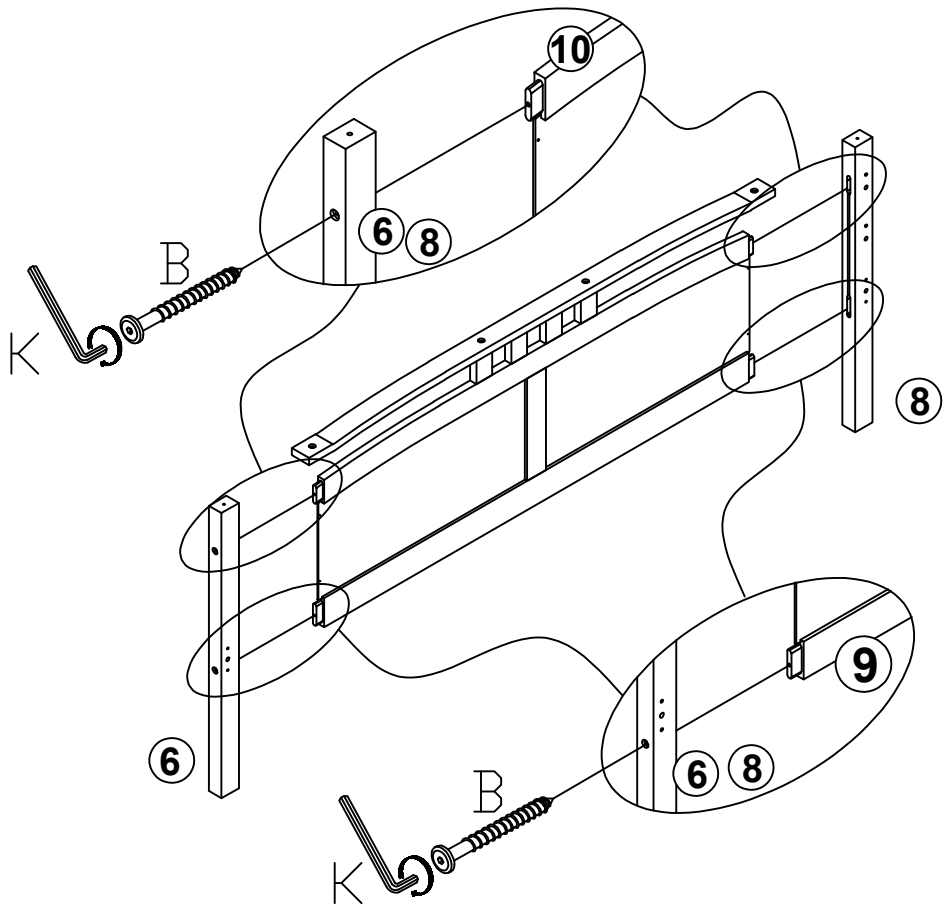

Step 8 :

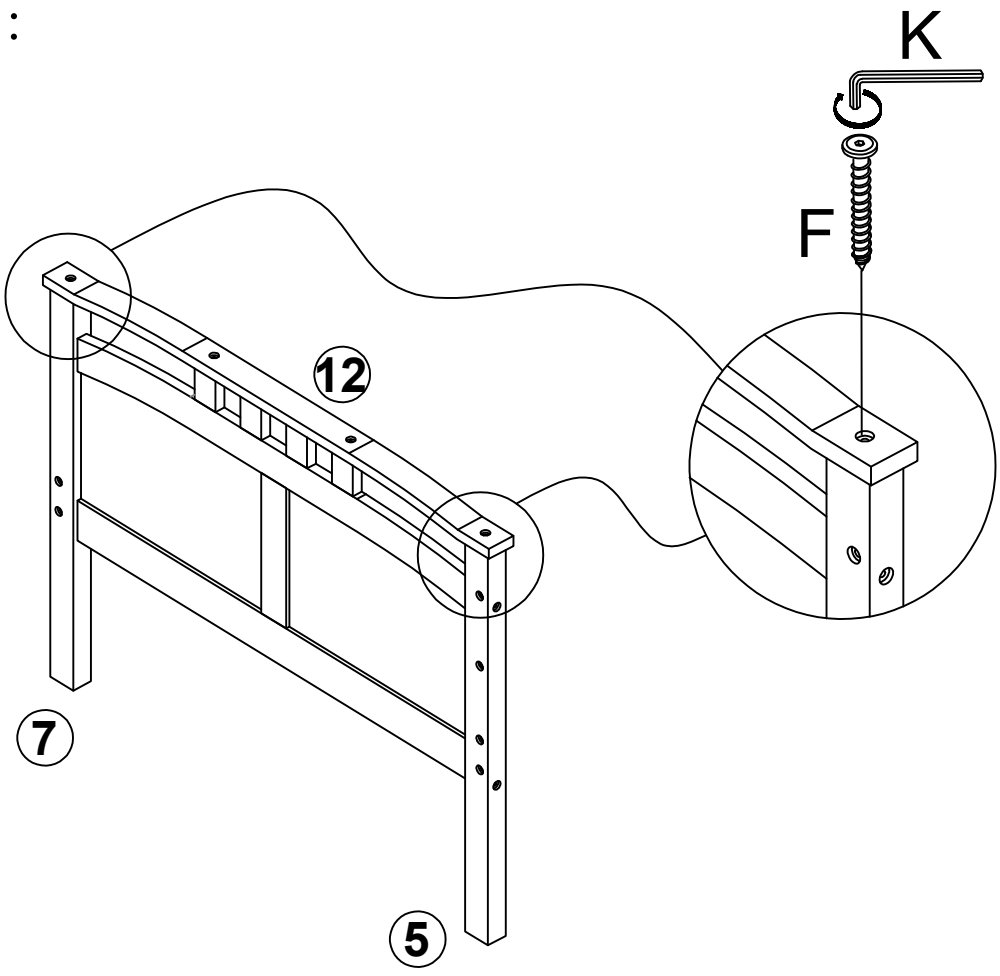

Step 9 :

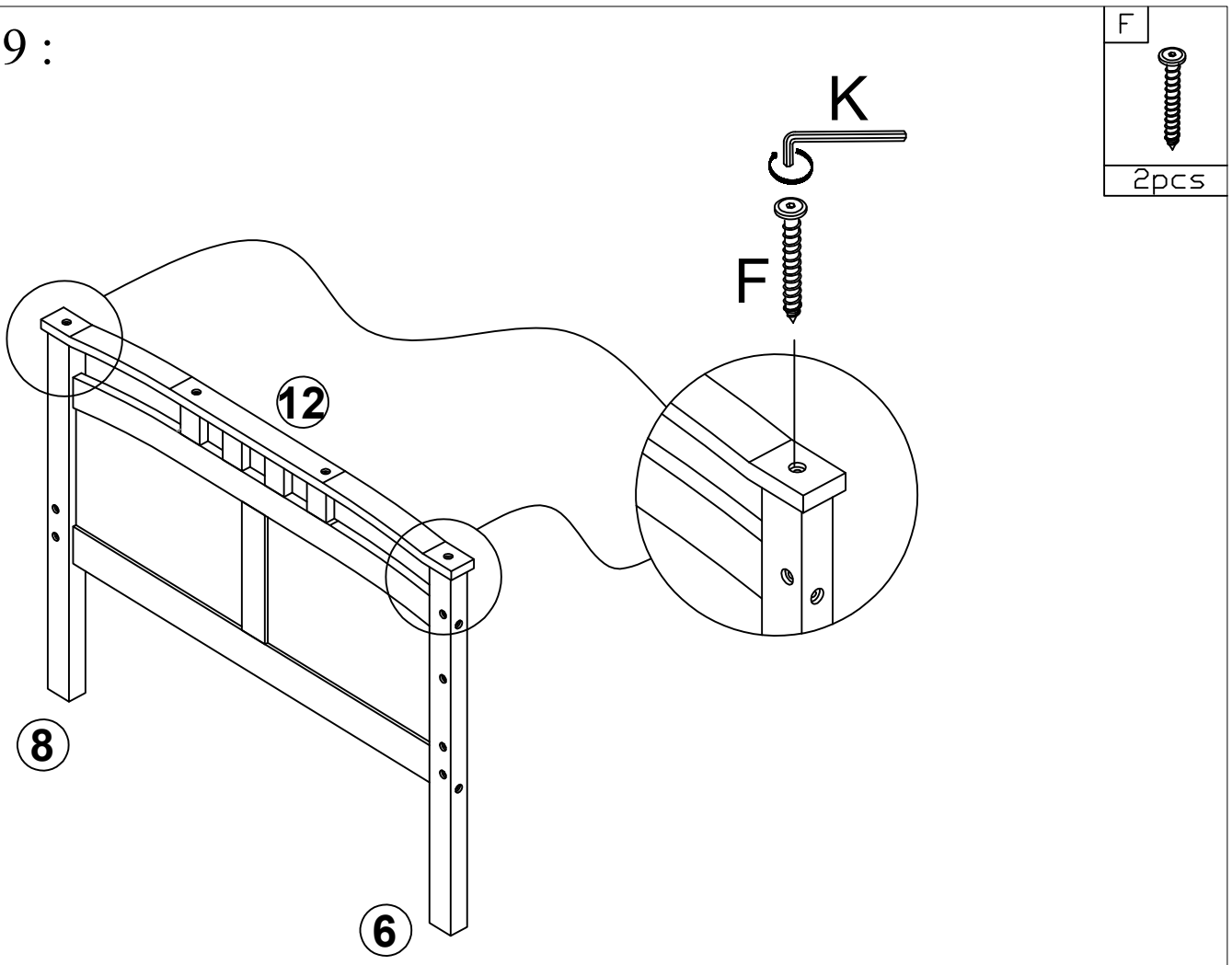

Step 10 :

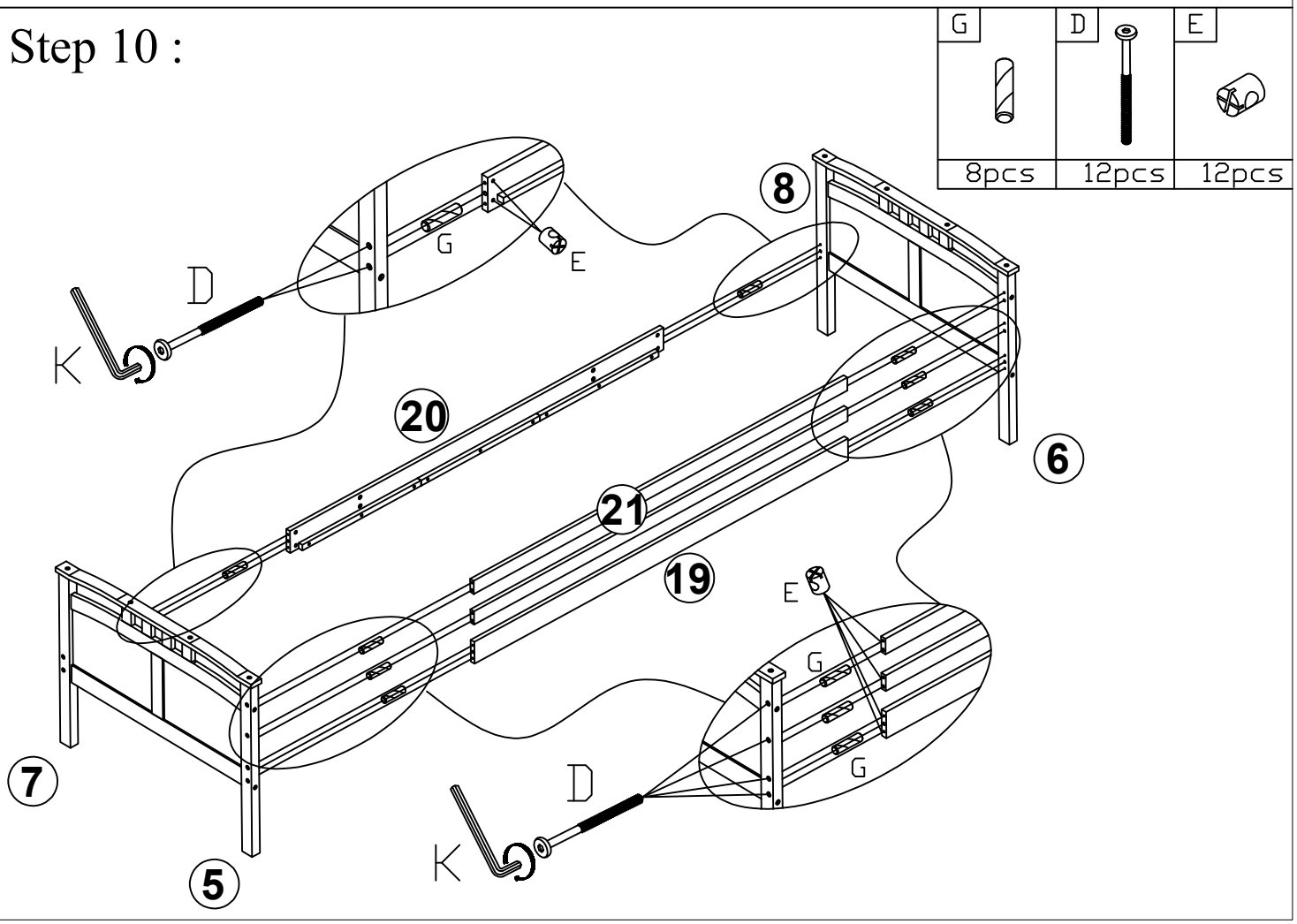

Step 11 :

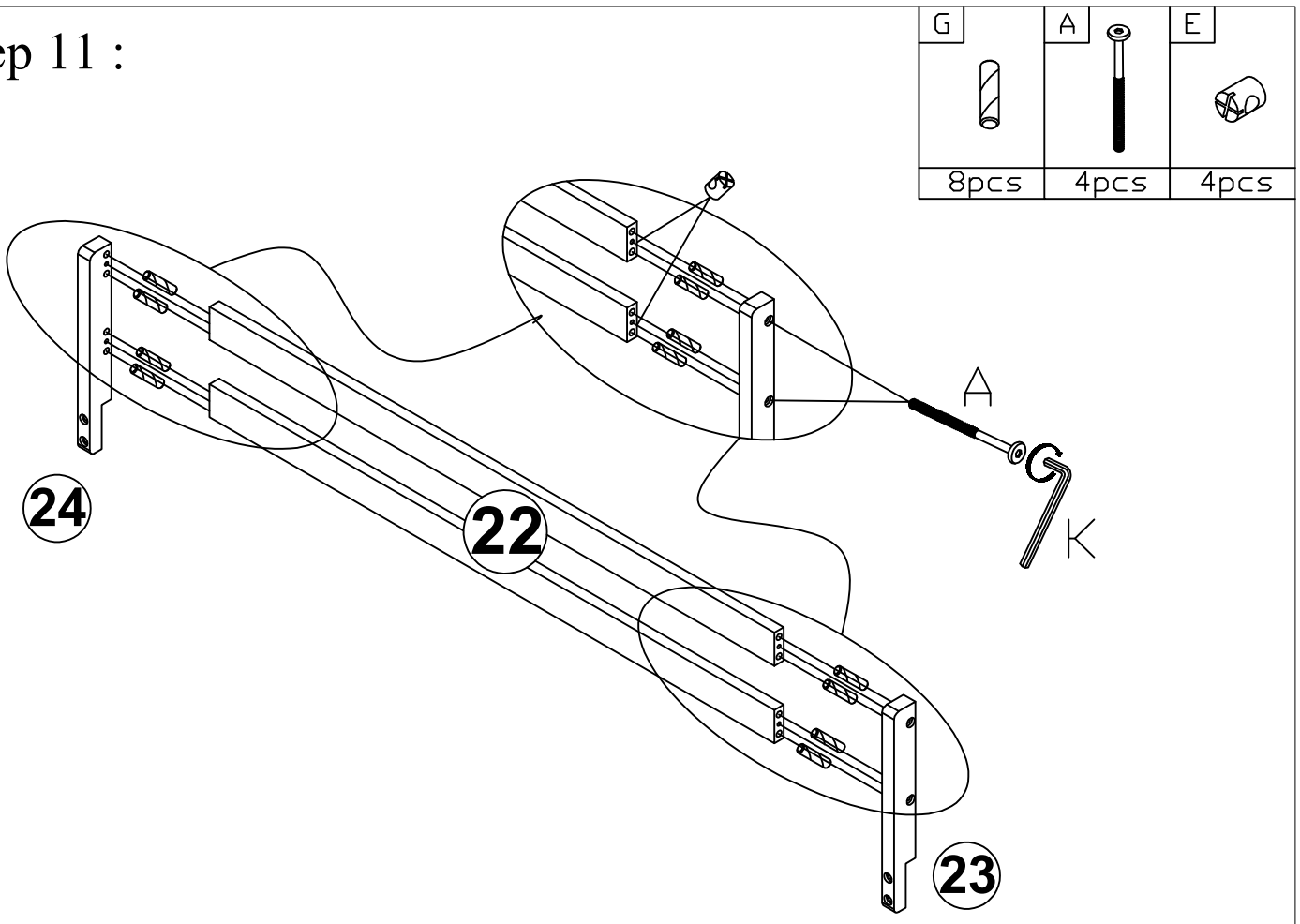

Step 12 :

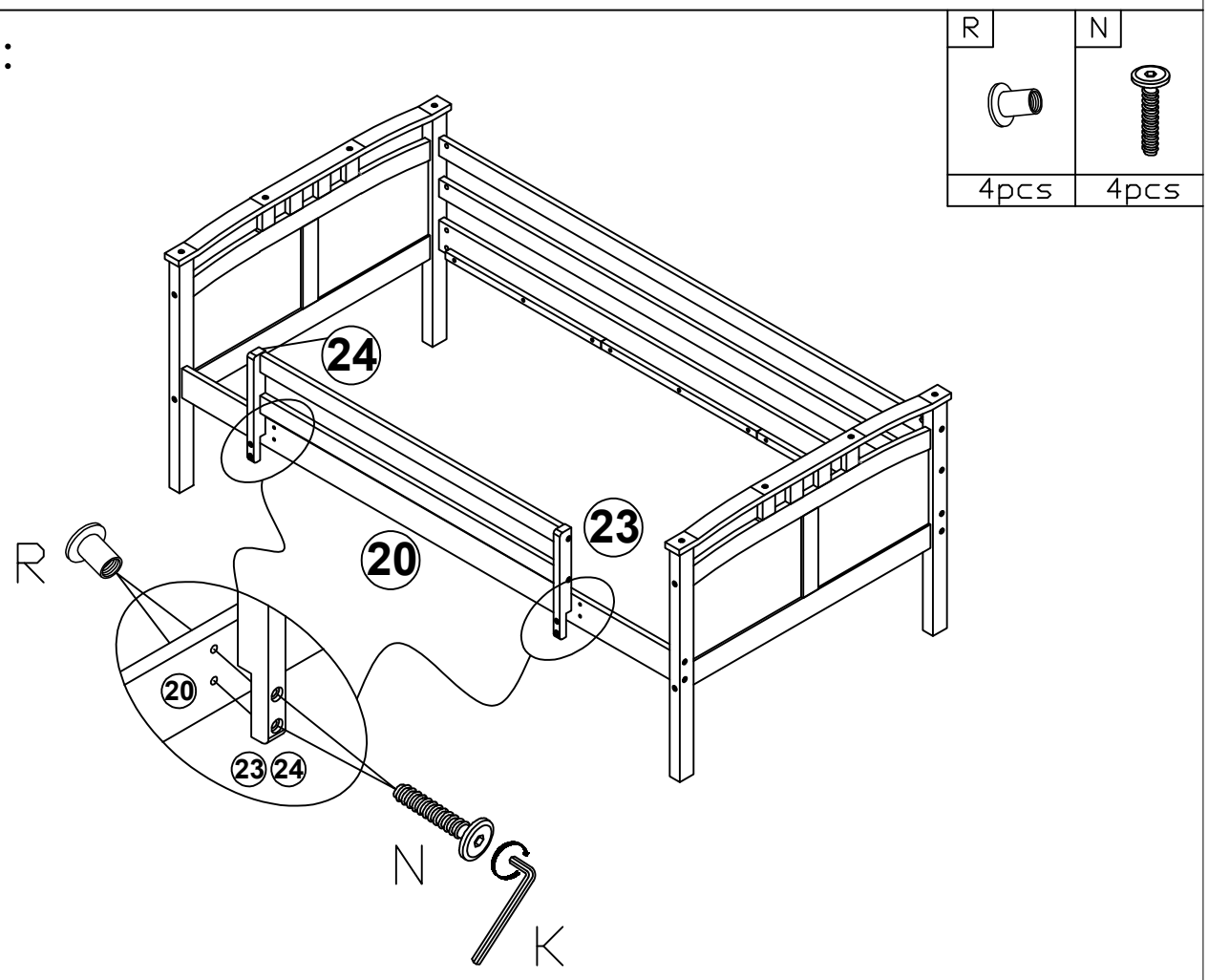

Step 13 :

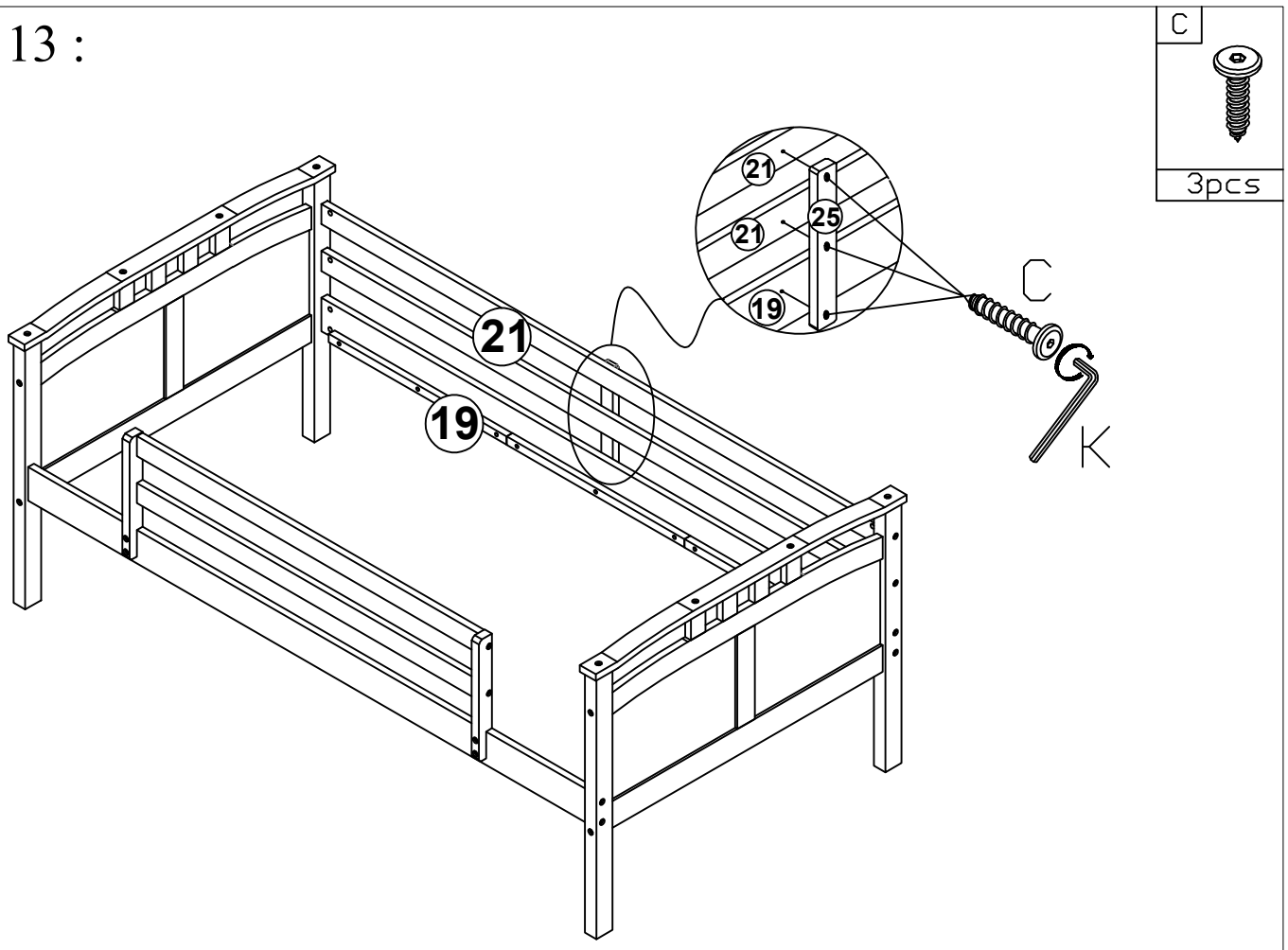

Step 14 :

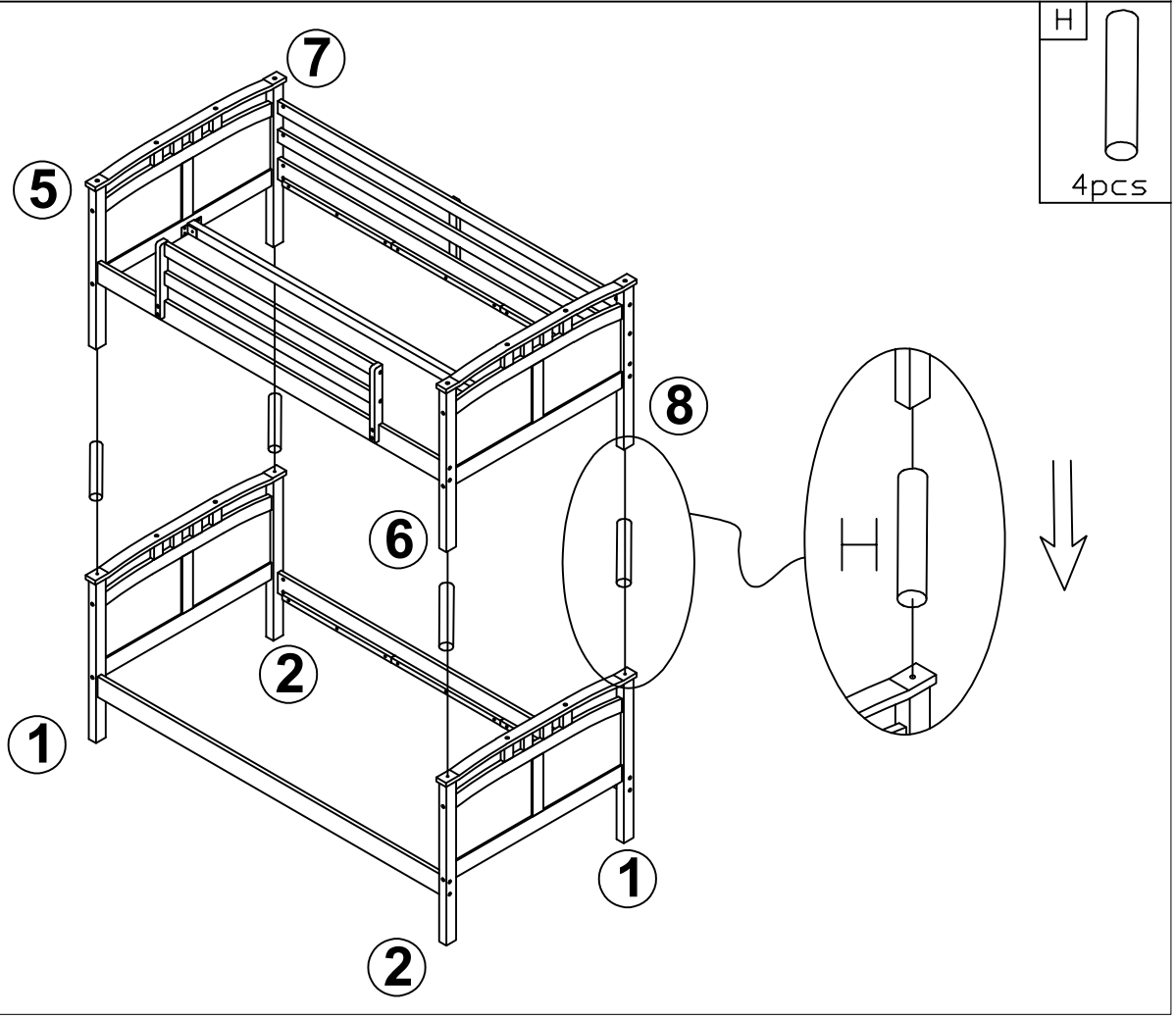

Step 15 :

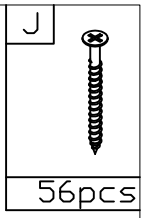

STEP 2: SCREW ALL SLATS

STEP 1: PULL SIDE RAIL CLOSE TOGETHER ENOUGH TO FIT THE SLATS

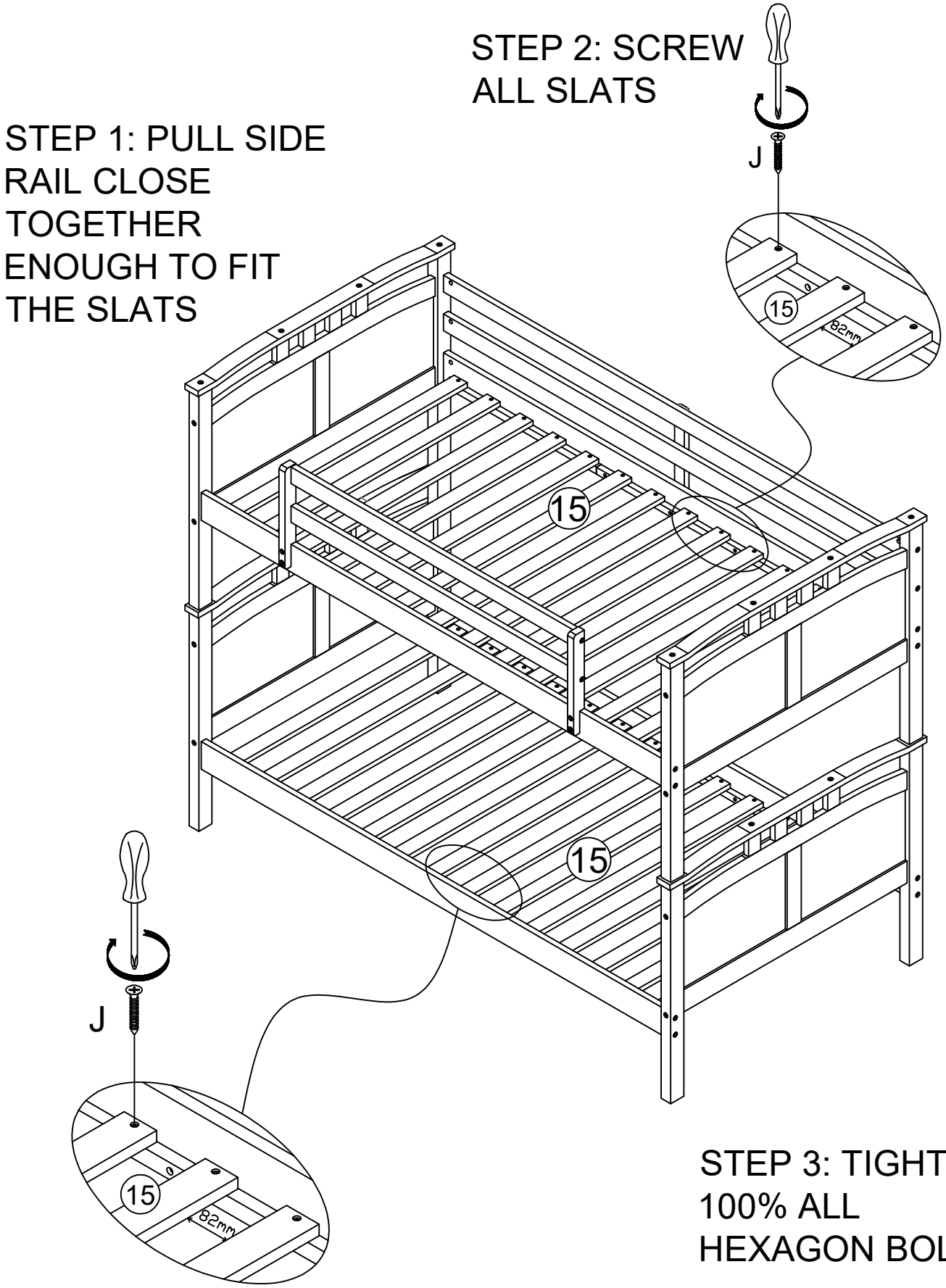

STEP 3: TIGHTEN 100% ALL HEXAGON BOLTS

Step 16 :

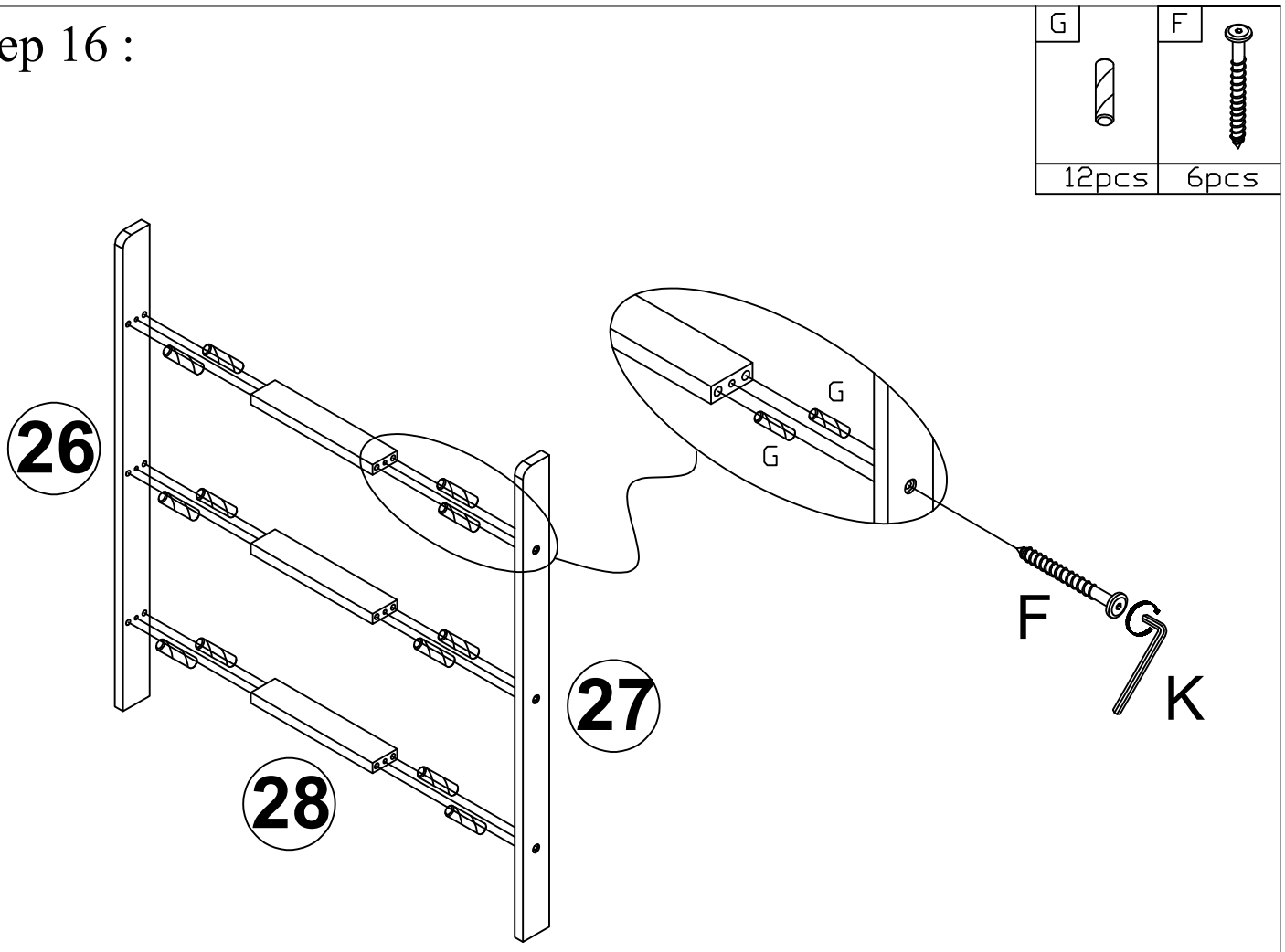

Step 17 :

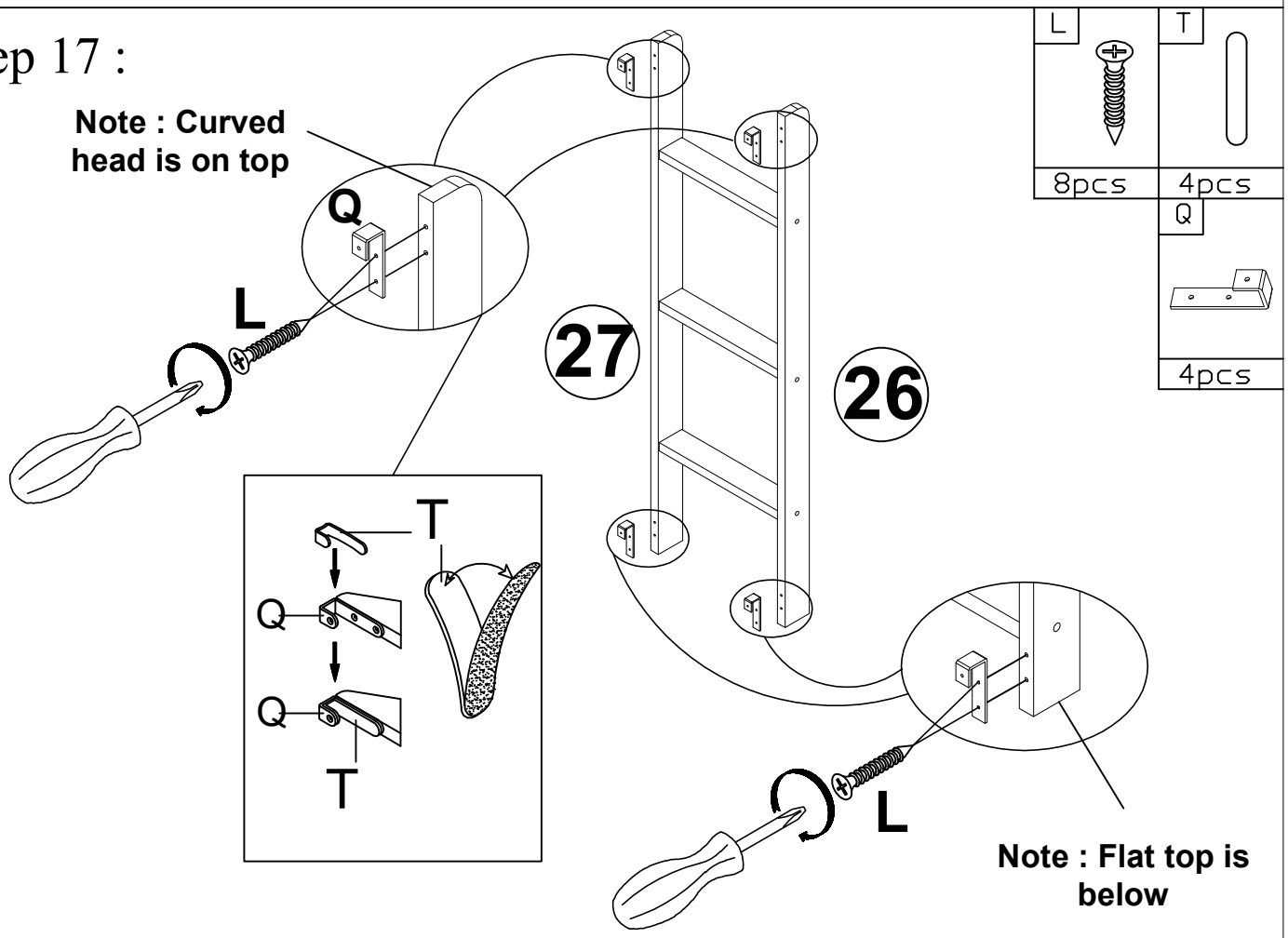

Step 18 :

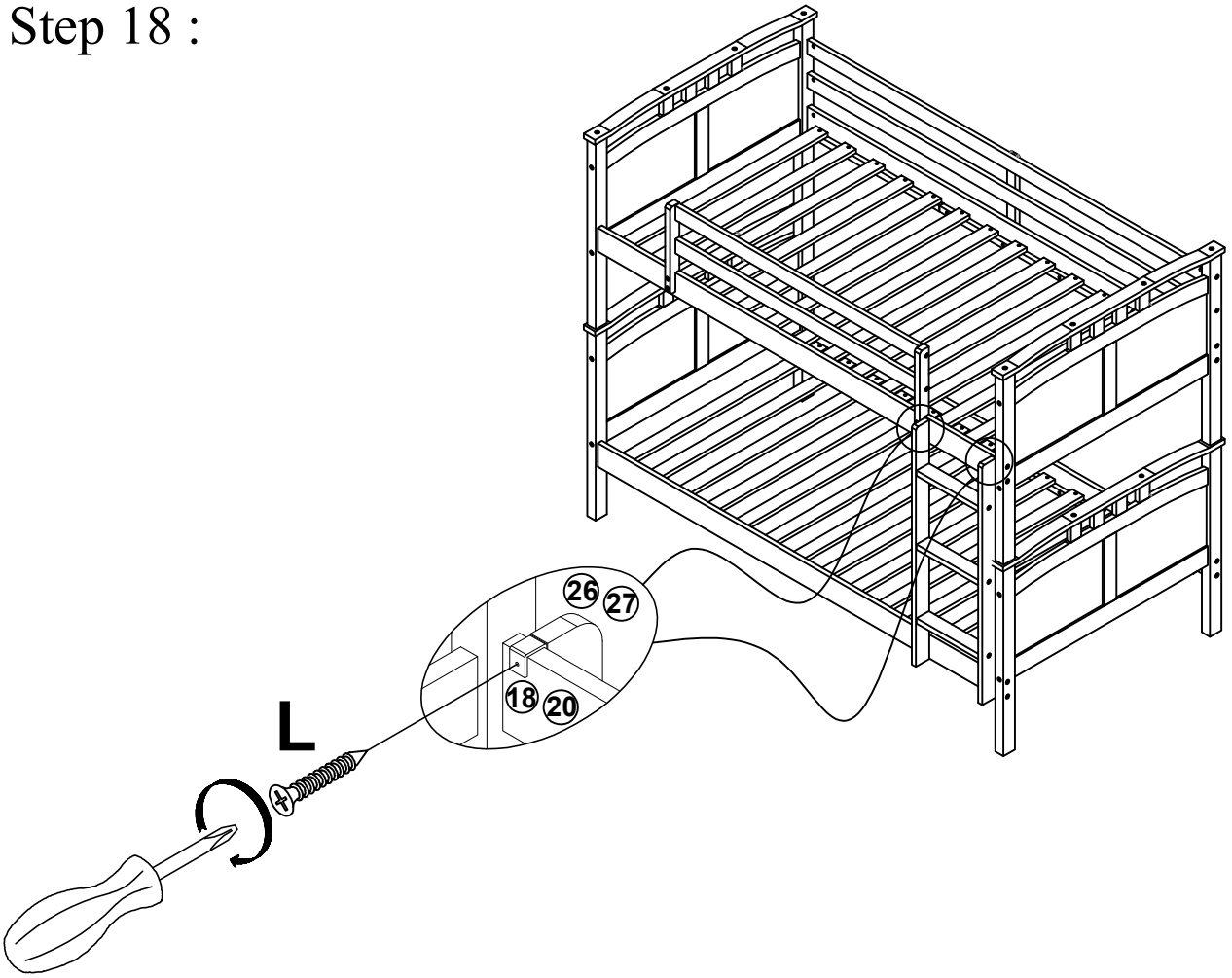

Step 19 :

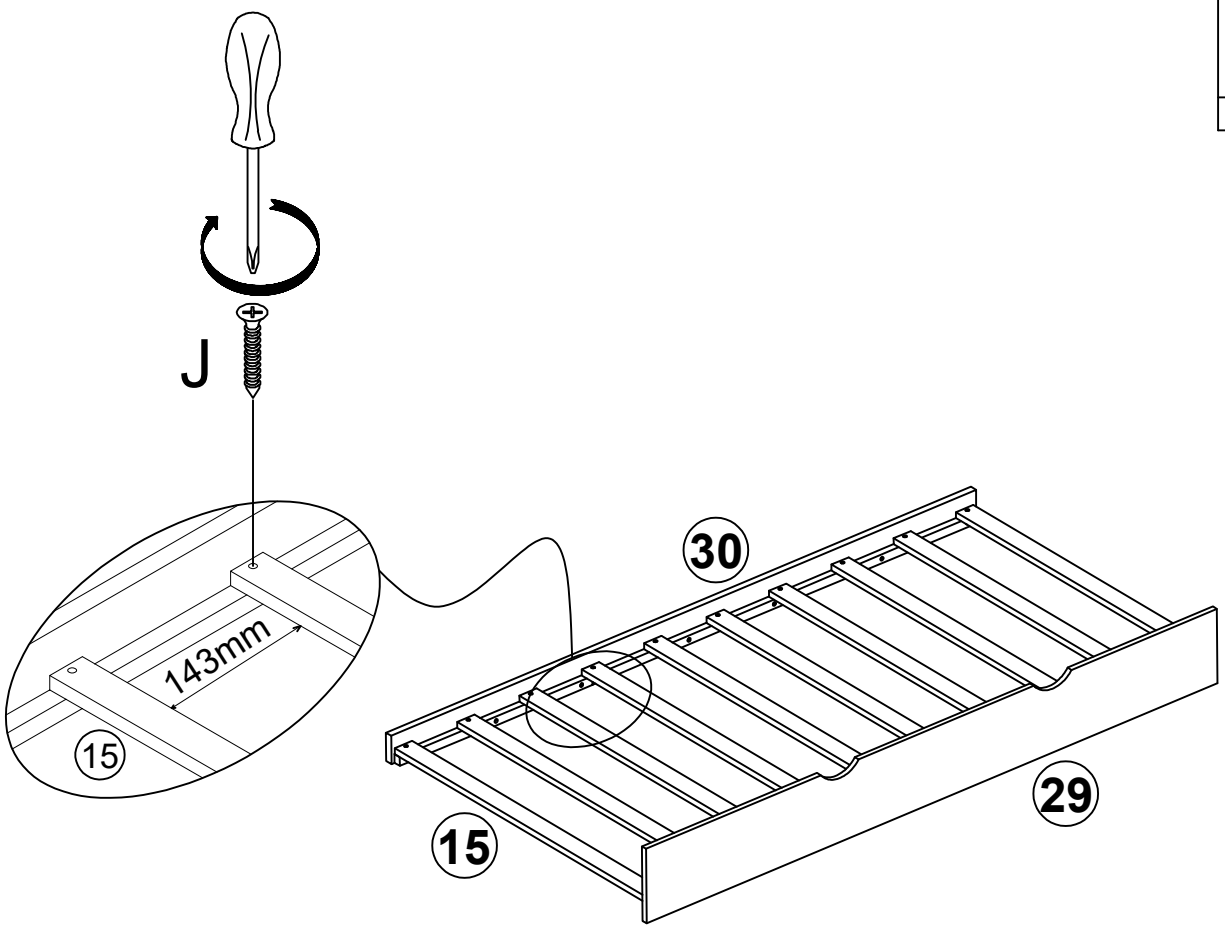

Step 20 :

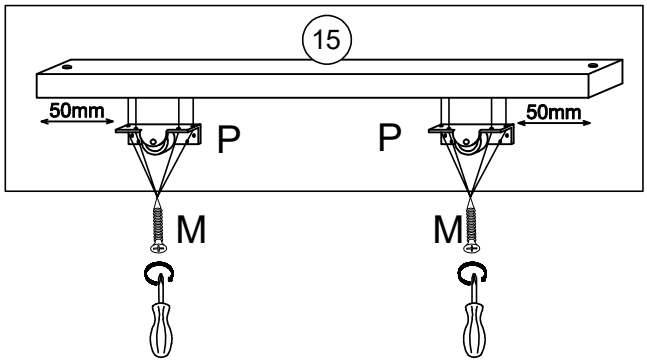

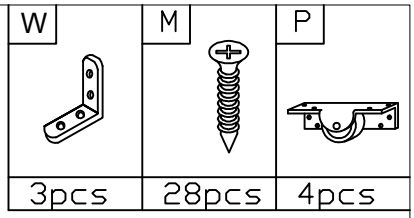

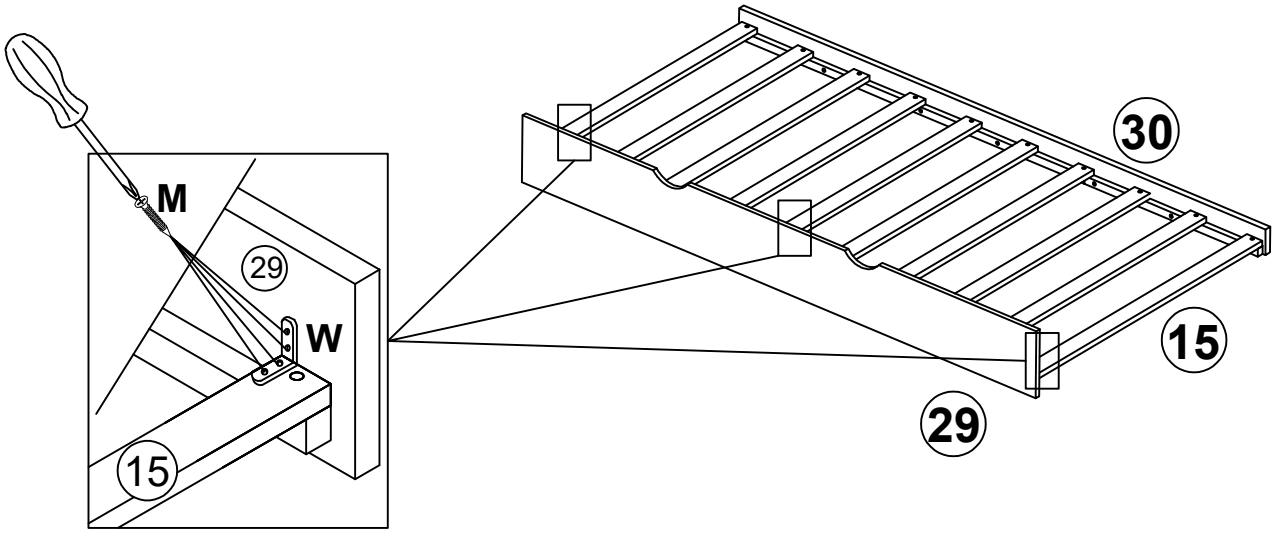

Step 21 :

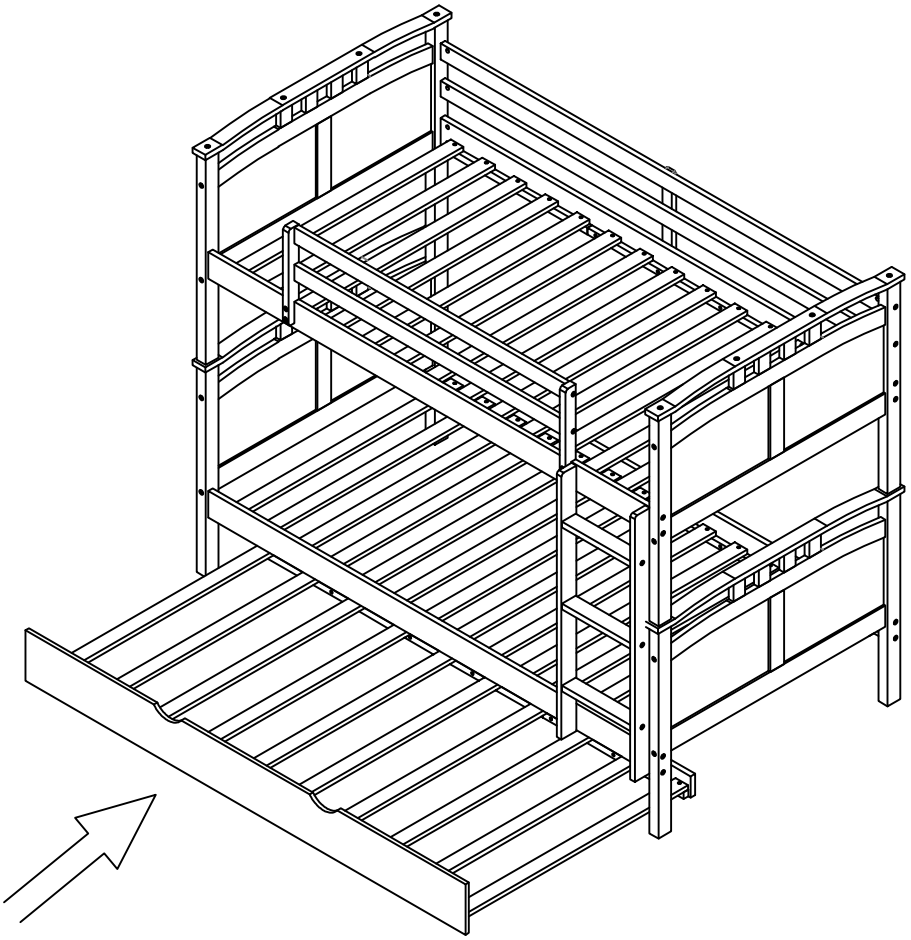
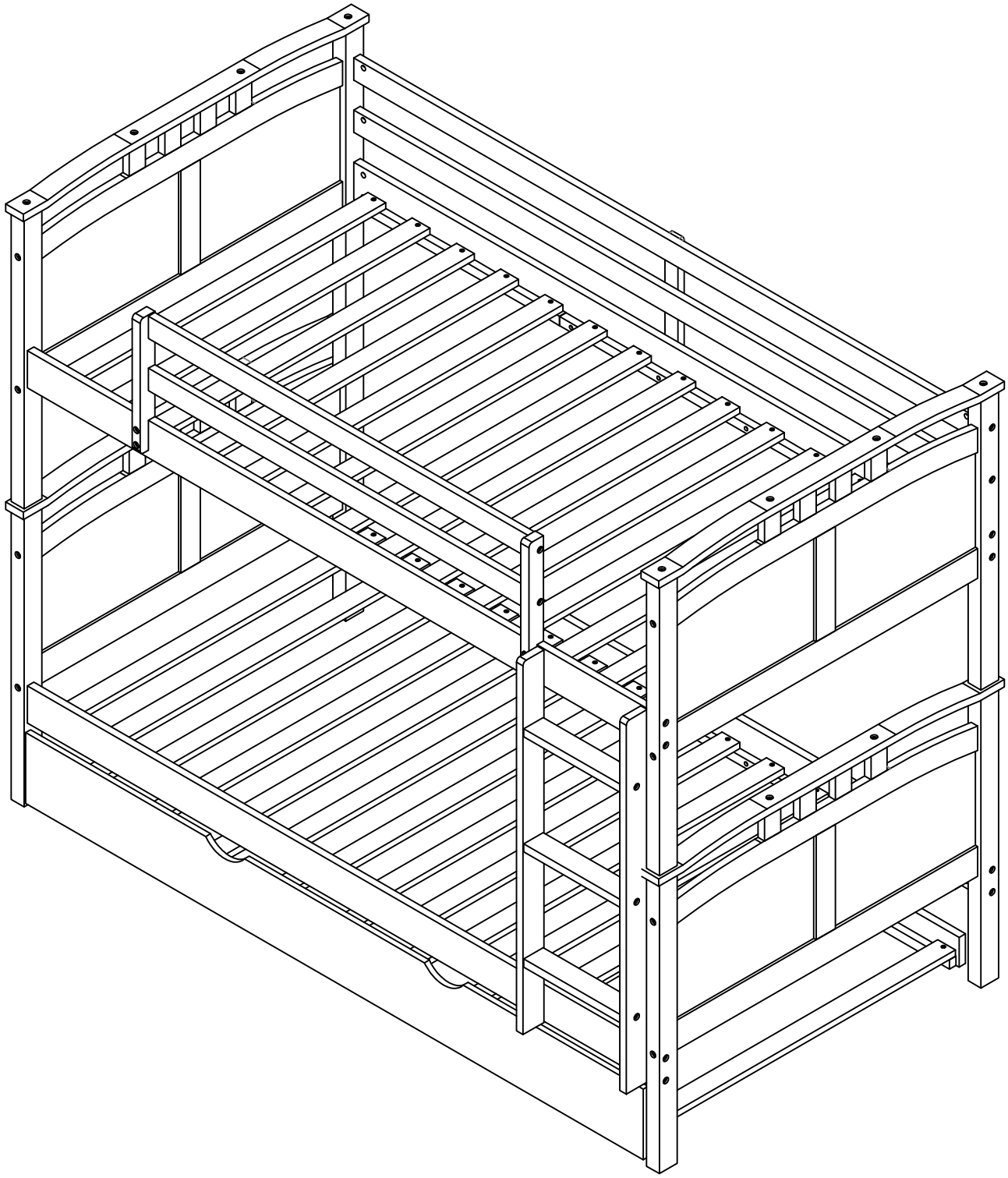
Completed